GF Piping Systems

Product range

PVC-C

Piping systems for industrial applications

Table of contents

FRONT	1
PVC-C metric	3
PVC-C metric silicone free/paint compatible	131
PVC-C ASTM / ANSI / BS	139
PVC-C ASTM / ANSI silicone free/paint compatible	189
PVC-C JIS	197
PVC-C JIS oil free	203
PVC-C Electric & pneumatic actuators	205
PVC-C Solvent cement and tools	214
PVC-C Spare parts	220

GF Piping Systems

PVC-C metric

PVC-C - metric		Page
	Pipes	6
	Fittings	7
	Adaptor fittings	13
	Installation fittings	15
	Unions	16
	Flange adaptors	22
	Ball valves electric type 543 Pro	24
	Ball valves type 546 Pro	29
	Ball valves electric type 167	35
	Ball valves electric type 179	41
	Ball valves pneumatic type 546 Pro with PPA	43
	Ball valves pneumatic type 543 Pro	62
	Butterfly valves type 567	71
	Butterfly valves type 578	74
	Butterfly valves electric type 145	77
	Butterfly valves electric type 146	81

PVC-C - metric		Page
	Butterfly valves pneumatic type 240	82
	Butterfly valves pneumatic type 243	85
	Diaphragm valves type 317	95
	Diaphragm valves type 514	96
	Diaphragm valves type 515	97
	Diaphragm valves type 517	98
	Diaphragm valves pneumatic DIASTAR Six	100
	Diaphragm valves pneumatic DIASTAR Ten	102
	Diaphragm valves pneumatic DIASTAR TenPlus	111
	Diaphragm valves DIASTAR big dimensions	114
	Pressure reducing valves type 582	118
	Pressure retaining valves type 586	122
	Process control valves	124
	Cone check valves	125
	Strainers	129

Pipes

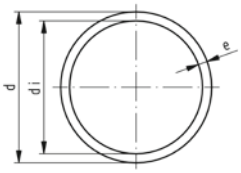

Pipe PVC-C grey
SDR9/PN25/S4

Model:

- Material: PVC-C, heat resistant
- Dimension: acc. to DIN 8079/80
- Colour: agate grey RAL 7038
- Pipe length: 5000mm, with plain ends
- Attention: Pressure rates refer to operating temperatures at 20°C. Higher temperatures and aggressive flow media reduce pressure load (see above DIN and our technical documentation). Pressure load capacity has to be determined in consideration with safety demands of the respective applications and calculated in accordance.

Note	d (mm)	SDR	PN (bar)	Code	Weight (kg/m)	e (mm)
	16	9	25	**163 017 130**	0.136	1.8
	20	9	25	**163 017 131**	0.217	2.3
	25	9	25	**163 017 132**	0.326	2.8
	32	9	25	**163 017 143**	0.534	3.6
	40	9	25	**163 017 144**	0.830	4.5
	50	9	25	**163 017 145**	1.290	5.6
	63	9	25	**163 017 146**	2.050	7.1

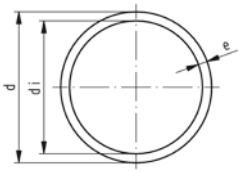

Pipe PVC-C grey
SDR13,6/PN16/S6,3

Model:

- Material: PVC-C, heat resistant
- Dimension: acc. to DIN 8079/80
- Colour: agate grey RAL 7038
- Pipe length: 5000mm, with plain ends
- Attention: Pressure rates refer to operating temperatures at 20°C. Higher temperatures and aggressive flow media reduce pressure load (see above DIN and our technical documentation). Pressure load capacity has to be determined in consideration with safety demands of the respective applications and calculated in accordance.

d (mm)	SDR	PN (bar)	Code	Weight (kg/m)	e (mm)
32	13.6	16	**163 017 133**	0.379	2.4
40	13.6	16	**163 017 134**	0.582	3.0
50	13.6	16	**163 017 135**	0.896	3.7
63	13.6	16	**163 017 136**	1.430	4.7
75	13.6	16	**163 017 137**	2.020	5.6
90	13.6	16	**163 017 138**	2.880	6.7
110	13.6	16	**163 017 139**	4.270	8.1
160	13.6	16	**163 017 142**	8.980	11.8

Fittings

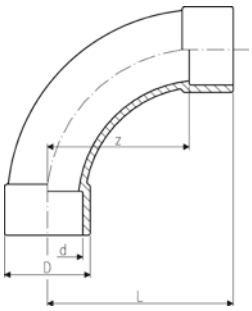

Bend 90° PVC-C metric

- Radius = 2 d

d (mm)	Size (inch)	PN (bar)	Code	SP	Weight (kg)	z (mm)	D (mm)	L (mm)
20		16	**723 000 106**	10	0.032	40	27	58
25		16	**723 000 107**	10	0.055	50	35	71
32		16	**723 000 108**	10	0.080	64	38	88
40		16	**723 000 109**	30	0.143	80	54	109
50		16	**723 000 110**	5	0.327	100	61	131
63		16	**723 000 111**	5	0.547	126	76	163
75	2 ½	16	**723 000 112**	5	0.847	150	90	194
90		16	**723 000 113**	5	1.470	180	113	231
110		16	**723 000 114**	5	2.943	220	137	284
160		16	**723 000 117**	1	7.950	320	192	406

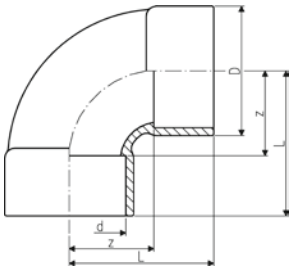

Bend 90° short pattern PVC-C metric

- Radius = 0,75 d

d (mm)	PN (bar)	Code	SP	Weight (kg)	z (mm)	D (mm)	L (mm)
225	10	**723 010 120**	1	7.930	168	256	287

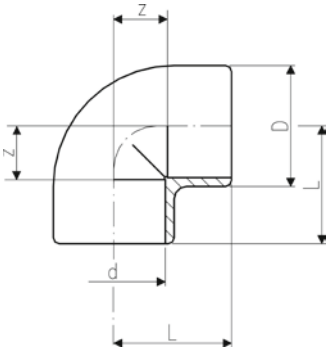

Elbow 90° PVC-C metric

d (mm)	Size (inch)	PN (bar)	Code	SP	Weight (kg)	z (mm)	D (mm)	L (mm)
16		16	**723 100 105**	10	0.015	9	21	23
20		16	**723 100 106**	10	0.014	11	25	27
25		16	**723 100 107**	10	0.025	14	31	33
32		16	**723 100 108**	10	0.047	17	40	39
40		16	**723 100 109**	10	0.077	21	49	47
50		16	**723 100 110**	10	0.139	26	61	57
63		16	**723 100 111**	10	0.259	33	76	72
75	2 ½	16	**723 100 112**	5	0.437	40	90	84
90		16	**723 100 113**	5	0.626	46	110	97
110		16	**723 100 114**	3	1.085	61	128	116
160		16	**723 100 117**	1	3.097	80	185	166

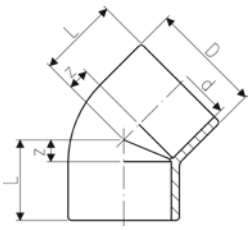

Elbow 45° PVC-C metric

d (mm)	Size (inch)	PN (bar)	Code	SP	Weight (kg)	z (mm)	D (mm)	L (mm)
16		16	**723 150 105**	10	0.008	5	21	19
20		16	**723 150 106**	10	0.011	5	25	21
25		16	**723 150 107**	10	0.021	6	31	25
32		16	**723 150 108**	10	0.037	8	40	30
40		16	**723 150 109**	5	0.063	10	49	36
50		16	**723 150 110**	5	0.110	12	61	43
63		16	**723 150 111**	10	0.207	14	76	52
75	2 ½	16	**723 150 112**	5	0.323	17	88	61
90		16	**723 150 113**	4	0.526	20	106	71
110		16	**723 150 114**	10	0.782	28	137	89
160		16	**723 150 117**	1	2.384	36	185	122
225		10	**723 150 120**	1	4.833	49	250	168

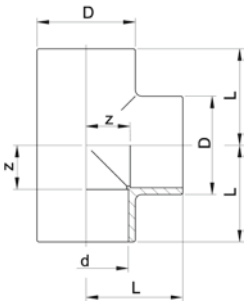

Tee 90° PVC-C metric

d (mm)	PN (bar)	Size (inch)	Code	SP	Weight (kg)	z (mm)	D (mm)	L (mm)
16	16		**723 200 105**	10	0.014	9	21	23
20	16		**723 200 106**	10	0.020	11	25	27
25	16		**723 200 107**	10	0.035	14	31	33
32	16		**723 200 108**	10	0.061	17	40	39
40	16		**723 200 109**	10	0.111	21	49	47
50	16		**723 200 110**	5	0.198	26	61	57
63	16		**723 200 111**	10	0.365	34	76	72
75	16	2 ½	**723 200 112**	5	0.581	40	90	84
90	16		**723 200 113**	4	0.945	47	107	98
110	16		**723 200 114**	6	1.450	55	128	116
160	16		**723 200 117**	4	5.580	81	193	167
225	10		**723 200 120**	1	9.560	114	256	233

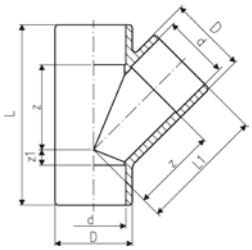

Tee 45° PVC-C metric

d (mm)	PN (bar)	Size (inch)	Code	SP	Weight (kg)	z (mm)	z1 (mm)	D (mm)	L (mm)	L1 (mm)
20	10		**723 250 106**	10	0.039	30	6	28	68	46
25	10		**723 250 107**	10	0.062	36	9	33	83	55
32	10		**723 250 108**	10	0.102	45	10	41	99	67
40	10		**723 250 109**	10	0.172	56	10	50	118	82
50	10		**723 250 110**	8	0.289	66	12	60	140	97
63	10		**723 250 111**	6	0.449	85	14	74	175	123
75	6	2 ½	**723 250 112**	5	0.857	101	18	91	207	145
90	6		**723 250 113**	1	1.334	122	20	107	245	173
110	6		**723 250 114**	3	2.677	149	27	134	298	210

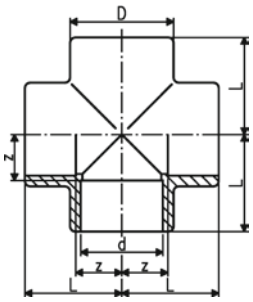

Cross PVC-C metric

d (mm)	PN (bar)	Code	SP	Weight (kg)	z (mm)	D (mm)	L (mm)
32	16	**723 300 108**	10	0.101	17	43	39
63	16	**723 300 111**	5	0.511	34	79	72

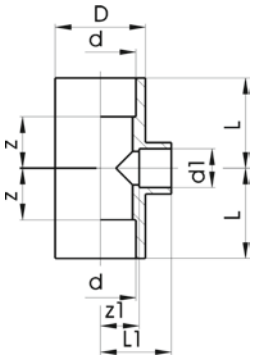

Tee 90° reducing PVC-C metric

*Tee 90° delivered with the required reducing bushes

	d (mm)	d1 (mm)	PN (bar)	Size (inch)	Code	SP	Weight (kg)	z1 (mm)	L1 (mm)	z (mm)	D (mm)	L (mm)
	25	20	16		**723 200 134**	10	0.042	14	30	14	33	33
	32	25	16		**723 200 138**	10	0.069	17	36	17	41	39
	40	25	16		**723 200 151**	10	0.120	23	42	23	50	49
	40	32	16		**723 200 147**	10	0.120	23	45	23	50	49
	50	20	16		**723 200 009**	5	0.196	28	44	28	62	59
	50	25	16		**723 200 010**	5	0.192	28	47	28	62	59
	50	32	16		**723 200 164**	10	0.199	28	50	28	62	59
	63	25	16		**723 200 011**	10	0.358	34	53	34	77	73
	63	32	16		**723 200 178**	5	0.368	34	56	35	77	73
	63	50	16		**723 200 170**	5	0.096	34	65	35	77	73
*	75	63	16	2 ½	**723 200 184**	8	0.766	47	84	41	92	84
*	90	32	16		**723 200 142**	6	1.436	75	97	46	111	97
*	90	63	16		**723 200 145**	5	1.166	66	97	46	111	97
*	110	32	16		**723 200 135**	3	2.796	101	116	55	128	116
*	110	90	16		**723 200 137**	3	1.780	71	116	55	128	116

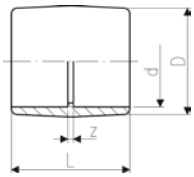

Socket PVC-C metric

d (mm)	PN (bar)	Code	SP	Weight (kg)	z (mm)	D (mm)	L (mm)
16	16	**723 910 105**	10	0.008	3	22	31
20	16	**723 910 106**	10	0.010	3	26	35
25	16	**723 910 107**	10	0.017	3	31	41
32	16	**723 910 108**	10	0.029	3	39	47
40	16	**723 910 109**	10	0.049	3	49	55
50	16	**723 910 110**	10	0.085	3	61	65
63	16	**723 910 111**	10	0.155	3	76	79
75	16	**723 910 112**	20	0.204	4	87	92
90	16	**723 910 113**	10	0.338	5	110	107
110	16	**723 910 114**	5	0.769	5	131	132
160	16	**723 910 117**	2	1.605	8	183	180
225	10	**723 910 120**	1	3.644	10	253	248

*

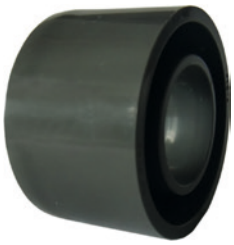

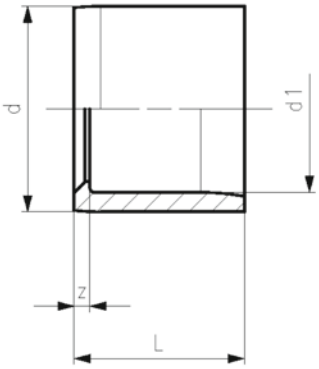

Reducing bush short pattern PVC-C metric

Model:

- With solvent cement spigot and socket metric

	d (mm)	d1 (mm)	PN (bar)	Size (inch)	Code	SP	Weight (kg)	z (mm)	L (mm)
*	20	16	16		**723 900 334**	10	0.004	2	16
*	25	20	16		**723 900 337**	10	0.004	3	19
*	32	20	16		**723 900 342**	10	0.015	6	22
*	32	25	16		**723 900 341**	10	0.010	4	22
	40	20	16		**723 900 348**	10	0.023	10	26
	40	25	16		**723 900 347**	10	0.024	7	26
*	40	32	16		**723 900 346**	10	0.017	4	26
	50	20	16		**723 900 355**	10	0.036	15	31
	50	25	16		**723 900 354**	10	0.037	12	31
	50	32	16		**723 900 353**	10	0.050	9	31
*	50	40	16		**723 900 352**	10	0.032	5	31
	63	32	16		**723 900 360**	10	0.086	16	38
	63	40	16		**723 900 359**	10	0.074	12	38
*	63	50	16		**723 900 358**	10	0.061	6	38
	75	50	16	2 ½	**723 900 365**	10	0.115	13	44
*	75	63	16	2 ½	**723 900 364**	10	0.086	6	44
	90	50	16		**723 900 372**	10	0.196	20	51
	90	63	16		**723 900 371**	10	0.183	14	51
*	90	75	16		**723 900 370**	10	0.146	8	51
	110	63	16		**723 900 378**	5	0.329	24	61
*	110	90	16		**723 900 376**	5	0.283	10	61
	160	110	16		**723 900 390**	6	0.956	25	86
	225	160	16		**723 900 396**	2	2.380	33	119

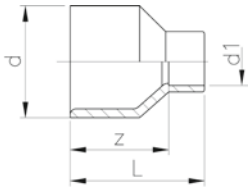

Reducing bush long pattern PVC-C metric

Model:

- With solvent cement spigot and socket metric

d (mm)	d1 (mm)	PN (bar)	Size (inch)	Code	SP	Weight (kg)	z (mm)	L (mm)
32	20	16		**723 910 342**	10	0.021	30	46
40	25	16		**723 910 347**	10	0.036	36	55
50	25	16		**723 910 354**	10	0.058	44	63
63	32	16		**723 910 360**	10	0.110	54	76
75	40	16	2 ½	**723 910 366**	5	0.165	62	88
90	63	16		**723 910 371**	5	0.466	74	112

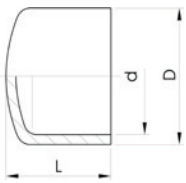

Cap PVC-C metric

d (mm)	PN (bar)	Code	SP	Weight (kg)	D (mm)	L (mm)
16	16	**723 960 105**	10	0.008	26	23
20	16	**723 960 106**	10	0.011	30	25
25	16	**723 960 107**	10	0.018	37	30
32	16	**723 960 108**	10	0.029	44	34
40	16	**723 960 109**	10	0.046	51	41
50	16	**723 960 110**	10	0.064	64	44
63	16	**723 960 111**	5	0.120	80	54

table continued on the next page

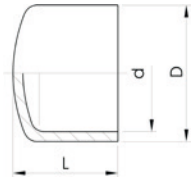

d (mm)	PN (bar)	Code	SP	Weight (kg)	D (mm)	L (mm)
75	16	**723 960 112**	5	0.162	87	66
90	16	**723 960 113**	10	0.315	112	75
110	16	**723 960 114**	5	0.692	134	93
160	10	**723 960 117**	2	1.599	189	130

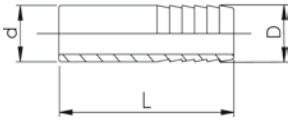

Hose nozzle PVC-C metric

Model:

- With solvent cement spigot and parallel hose connection

d (mm)	PN (bar)	Code	SP	Weight (kg)	D (mm)	L (mm)
16	16	**723 960 405**	10	0.009	16	57
20	16	**723 960 406**	10	0.016	20	73
25	16	**723 960 407**	10	0.023	25	79
32	16	**723 960 408**	10	0.038	30	89

Adaptor fittings

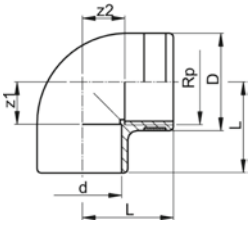

Elbow 90° PVC-C metric Rp

Model:

- With solvent cement socket metric and parallel female thread Rp
- Reinforcing ring stainless (A2)
- Connection to plastic or metal threads
- Install with low mechanical stress and avoid large cyclic temperature changes
- Do not use thread sealing pastes that are harmful to PVC-C

Rp (inch)	d (mm)	PN (bar)	Code	SP	Weight (kg)	z1 (mm)	z2 (mm)	D (mm)	L (mm)
½	20	16	**723 100 206**	10	0.024	11	14	30	27
¾	25	16	**723 100 207**	10	0.037	14	17	35	33
1	32	16	**723 100 208**	10	0.063	17	22	45	39
1 ¼	40	16	**723 100 209**	10	0.134	23	27	55	50
1 ½	50	16	**723 100 210**	5	0.199	27	36	62	58
2	63	16	**723 100 211**	10	0.337	33	46	75	73

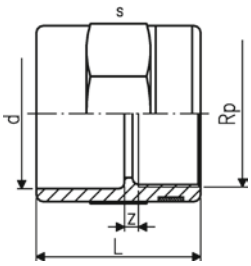

Socket PVC-C metric Rp

Model:

- With solvent cement socket metric and parallel female thread Rp
- Reinforcing ring stainless (A2)
- Connection to plastic or metal threads
- Install with low mechanical stress and avoid large cyclic temperature changes
- Do not use thread sealing pastes that are harmful to PVC-C

d (mm)	Thread Type	Size (inch)	PN (bar)	Code	SP	Weight (kg)	z (mm)	L (mm)	s (mm)
20	Rp	½	16	**723 910 206**	10	0.027	4	35	32
25	Rp	¾	16	**723 910 207**	10	0.035	3	40	36
32	Rp	1	16	**723 910 208**	10	0.059	3	45	46
40	Rp	1 ¼	16	**723 910 209**	10	0.093	5	51	55
50	Rp	1 ½	16	**723 910 210**	10	0.133	7	59	65
63	Rp	2	16	**723 910 211**	5	0.211	7	69	80

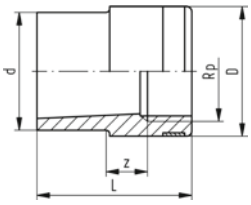

Reducing bush PVC-C metric Rp

Model:

- With solvent cement spigot metric and parallel female thread Rp
- Reinforcing ring stainless (A2)
- Connection to plastic or metal threads
- Install with low mechanical stress and avoid large cyclic temperature changes

d (mm)	Thread Type	Size (inch)	PN (bar)	Code	SP	Weight (kg)	z (mm)	D (mm)	L (mm)
20	Rp	⅜	16	**723 910 434**	10	0.016	7	25	35
25	Rp	½	16	**723 910 437**	10	0.022	7	30	41
32	Rp	¾	16	**723 910 441**	10	0.033	15	35	48
40	Rp	1	16	**723 910 446**	10	0.061	20	45	56
50	Rp	1 ¼	16	**723 910 452**	10	0.105	20	55	66
63	Rp	1 ½	16	**723 910 458**	5	0.161	10	62	77

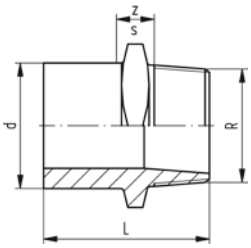

Adaptor nipple PVC-C metric R

Model:

- With solvent cement spigot metric and taper male thread R
- Install with low mechanical stress and avoid large cyclic temperature changes
- Do not use thread sealing pastes that are harmful to PVC-C

Thread Type	Size (inch)	d (mm)	PN (bar)	Code	SP	Weight (kg)	L (mm)	z (mm)	s (mm)
R	⅜	16	16	**723 910 505**	10	0.012	35	8	27

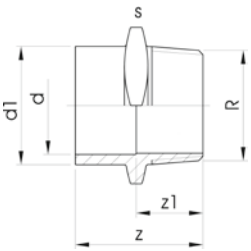

Adaptor socket nipple PVC-C metric R

Model:

- With solvent cement spigot/socket metric and taper male thread R
- Install with low mechanical stress and avoid large cyclic temperature changes
- Do not use thread sealing pastes that are harmful to PVC-C

d (mm)	PN (bar)	Thread Type	Size (inch)	d1 (mm)	Code	SP	Weight (kg)	z (mm)	z1 (mm)	s (mm)
16	16	R	½	20	**723 910 556**	10	0.017	42	28	32
20	16	R	¾	25	**723 910 557**	10	0.026	47	31	36
25	16	R	1	32	**723 910 558**	10	0.043	54	35	46
32	16	R	1 ¼	40	**723 910 559**	10	0.065	60	38	55
40	16	R	1 ½	50	**723 910 560**	10	0.102	66	40	65
50	16	R	2	63	**723 910 561**	5	0.173	78	47	80

Installation fittings

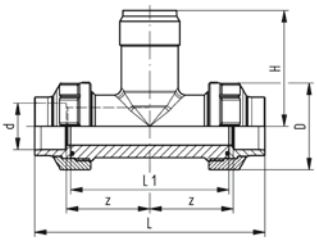

Installation fitting type 310 PVC-C
For socket systems metric

Range of use:

- Compatible Signet flow sensors: type 2551, 2537, 515, 8510, 2536, 8512
- Compatible Signet pH/ORP sensors: type 2724, 2725, 2726, 2734, 2736, 2735

Attention:

- sensor length depends on installation fitting

Model:

- Threaded outlet 1 ¼" NPSM
- Body and union nut PVDF
- Union end with solvent cement socket PVC-C

d (mm)	DN (mm)	PN (bar)	EPDM Code	SP	Weight (kg)	FKM Code	SP	Weight (kg)
20	15	16	**723 310 006**	1	0.250	**723 310 036**	1	0.250
25	20	16	**723 310 007**	1	0.355	**723 310 037**	1	0.355
32	25	16	**723 310 008**	1	0.427	**723 310 038**	1	0.427
40	32	16	**723 310 009**	1	0.700	**723 310 039**	1	0.700
50	40	16	**723 310 010**	1	0.850	**723 310 040**	1	0.850
63	50	16	**723 310 011**	1	1.182	**723 310 041**	1	1.182

d (mm)	DN (mm)	D (mm)	L (mm)	L1 (mm)	H (mm)	z (mm)	Sensor Type
20	15	45	132	90	76	49	flow X0; pH XX
25	20	55	148	100	78	53	flow X0; pH XX
32	25	62	164	110	81	58	flow X0; pH XX
40	32	75	172	110	85	58	flow X0; pH XX
50	40	84	188	120	89	63	flow X0; pH XX
63	50	101	212	130	95	68	flow X0; pH XX

Unions

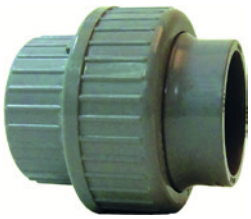

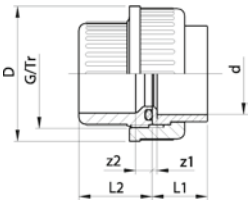

Union PVC-C metric

Model:

- Union End: PVC-C solvent cement socket metric
- Union bush: PVC-C solvent cement socket metric
- Gasket: O-ring EPDM code no. 748 410 005-016, for d90 748 410 248
- Gasket: O-ring FKM code no. 749 410 005 -016, for d90: 749 410 248

d (mm)	Size (inch)	PN (bar)	EPDM Code	SP	Weight (kg)	FKM Code	SP	Weight (kg)
16		16	**723 510 105**	10	0.028	**723 510 130**	10	0.027
20		16	**723 510 106**	10	0.046	**723 510 131**	10	0.044
25		16	**723 510 107**	10	0.063	**723 510 132**	10	0.072
32		16	**723 510 108**	10	0.090	**723 510 133**	10	0.098
40		16	**723 510 109**	10	0.158	**723 510 134**	10	0.167
50		16	**723 510 110**	5	0.214	**723 510 135**	2	0.098
63		16	**723 510 111**	5	0.360	**723 510 136**	10	0.362
75	2 ½	10	**723 510 112**	2	0.650	**723 510 137**	2	0.670
90		10	**723 510 313**	2	0.994	**723 510 338**	2	1.008
110		10	**723 510 114**	1	1.509	**723 510 139**	1	1.523

z1 (mm)	z2 (mm)	D (mm)	L1 (mm)	L2 (mm)	G/Tr (inch)
3	8	35	19	24	3/4
3	9	43	21	26	1
3	9	53	24	29	1 1/4
3	9	60	27	33	1 1/2
3	10	74	32	39	2
3	10	83	33	46	2 1/4
3	10	103	40	58	2 3/4
3	18	135	47	62	Tr108x5
5	18	158	56	69	Tr128x5
5	11	188	66	72	Tr154x6

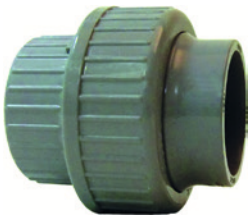

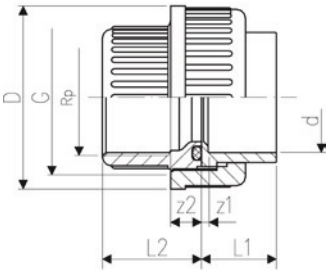

Adaptor union PVC-C metric Rp

Model:

- Union End: PVC-C solvent cement socket metric
- Union Bush: PVC-C parallel female thread Rp
- Gasket: O-ring EPDM code no. 748 410 005-011
- Gasket: O-ring FKM code no. 749 410 005-011
- Connection to plastic thread only
- Do not use thread sealing pastes that are harmful to PVC-C

d (mm)	Thread Type	Size (inch)	PN (bar)	EPDM Code	SP	Weight (kg)	FKM Code	SP	Weight (kg)
16	Rp	⅜	10	**723 510 205**	10	0.022	**723 510 230**	1	0.022
20	Rp	½	10	**723 510 206**	10	0.047	**723 510 231**	1	0.040
25	Rp	¾	10	**723 510 207**	10	0.065	**723 510 232**	1	0.065
32	Rp	1	10	**723 510 208**	10	0.103	**723 510 233**	1	0.103
40	Rp	1 ¼	10	**723 510 209**	10	0.155	**723 510 234**	1	0.174
50	Rp	1 ½	10	**723 510 210**	2	0.239	**723 510 235**	1	0.239
63	Rp	2	10	**723 510 211**	2	0.400	**723 510 236**	1	0.435

d (mm)	z1 (mm)	z2 (mm)	D (mm)	L1 (mm)	L2 (mm)	G (inch)
16	3	13	35	17	24	3/4
20	3	13	43	19	26	1
25	3	14	51	22	29	1 1/4

table continued on the next page

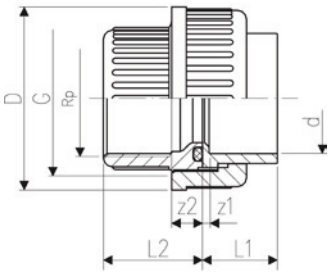

d (mm)	z1 (mm)	z2 (mm)	D (mm)	L1 (mm)	L2 (mm)	G (inch)
32	3	15	58	25	32	1 1/2
40	3	19	74	31	38	2
50	3	26	83	34	45	2 1/4
63	3	33	100	41	56	2 3/4

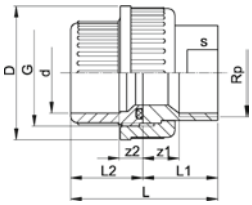

Adaptor union PVC-C metric stainless steel Rp

Model:

- Union Nut: PVC-C
- Union Bush: Solvent cement socket PVC-C metric
- Union End: Stainless Steel WN 1.4404 (316L), parallel female thread Rp
- Gasket: O-ring EPDM code no. 748 410 005-011

d (mm)	Thread Type	Size (inch)	PN (bar)	EPDM Code	SP	Weight (kg)	FKM Code	SP	Weight (kg)
16	Rp	⅜	16	**723 540 205**	10	0.053	**723 540 230**	1	0.053
20	Rp	½	16	**723 540 206**	10	0.096	**723 540 231**	1	0.096
25	Rp	¾	16	**723 540 207**	5	0.154	**723 540 232**	1	0.154
32	Rp	1	16	**723 540 208**	5	0.212	**723 540 233**	1	0.212
40	Rp	1 ¼	16	**723 540 209**	2	0.356	**723 540 234**	1	0.347
50	Rp	1 ½	16	**723 540 210**	2	0.455	**723 540 235**	1	0.502
63	Rp	2	16	**723 540 211**	2	0.721	**723 540 236**	1	0.721

z1 (mm)	z2 (mm)	D (mm)	L (mm)	L1 (mm)	L2 (mm)	G (inch)	s (mm)
9	10	35	43	19	24	3/4	19
11	10	43	50	24	26	1	24
11	10	51	55	26	29	1 1/4	29
12	10	58	61	29	33	1 1/2	36
14	12	74	71	33	39	2	45
15	14	83	79	34	46	2 1/4	54
15	18	100	95	39	58	2 3/4	63

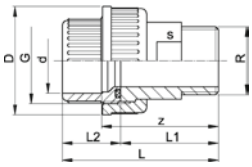

Adaptor union PVC-C metric stainless steel R

Model:

- Union Nut: PVC-C
- Union Bush: Solvent cement socket PVC-C metric
- Union End: Stainless Steel WN 1.4404 (316L), taper male thread R
- Gasket: O-ring EPDM code no. 748 410 005-011

d (mm)	Thread Type	Size (inch)	PN (bar)	EPDM Code	SP	Weight (kg)	FKM Code	SP	Weight (kg)
16	R	⅜	16	**723 540 705**	10	0.073	**723 540 730**	1	0.073
20	R	½	16	**723 540 706**	10	0.126	**723 540 731**	1	0.120
25	R	¾	16	**723 540 707**	5	0.174	**723 540 732**	1	0.174
32	R	1	16	**723 540 708**	5	0.262	**723 540 733**	1	0.259
40	R	1 ¼	16	**723 540 709**	2	0.476	**723 540 734**	1	0.482
50	R	1 ½	16	**723 540 710**	10	0.535	**723 540 735**	1	0.535
63	R	2	16	**723 540 711**	2	0.931	**723 540 736**	1	0.982

table continued on the next page

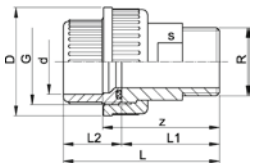

z (mm)	D (mm)	L (mm)	L1 (mm)	L2 (mm)	G (inch)	s (mm)
40	35	54	30	24	3/4	19
44	43	60	34	26	1	24
46	51	65	36	29	1 1/4	32
50	58	72	40	33	1 1/2	37
58	74	84	46	39	2	48
62	83	93	48	46	2 1/4	54
73	100	111	55	58	2 3/4	69

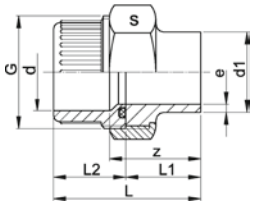

Adaptor union PVC-C metric stainless steel welding end

Model:

- Union Nut: Stainless Steel WN 1.4404 (316L)
- Union Bush: Solvent cement socket PVC-C metric
- Union End: Stainless Steel 1.4404 (316L) with welding end
- Gasket: O-ring EPDM code no. 748 410 005-011

d (mm)	PN (bar)	d1 (mm)	EPDM Code	SP	Weight (kg)	FKM Code	SP	Weight (kg)
16	16	17	**723 545 505**	10	0.101	**723 545 530**		0.101
20	16	21	**723 545 506**	10	0.176	**723 545 531**	1	0.171
25	16	27	**723 545 507**	5	0.204	**723 545 532**	1	0.204
32	16	34	**723 545 508**	5	0.313	**723 545 533**	1	0.313
40	16	42	**723 545 509**	2	0.493	**723 545 534**	1	0.493
50	16	48	**723 545 510**	2	0.566	**723 545 535**	1	0.566
63	16	60	**723 545 511**	2	0.902	**723 545 536**	1	0.885

z (mm)	L (mm)	L1 (mm)	L2 (mm)	e (mm)	G (inch)	s (mm)
28	42	18	24	1.6	3/4	32
32	48	22	26	2.0	1	41
33	52	23	29	2.0	1 1/4	46
36	58	26	33	2.0	1 1/2	55
38	64	26	39	2.0	2	68
42	73	28	46	2.0	2 1/4	74
50	88	32	58	2.6	2 3/4	88

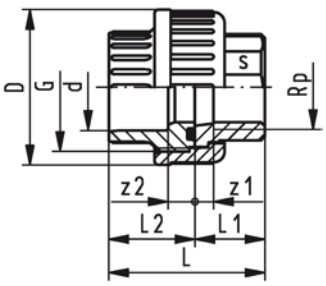

Adaptor union PVC-C metric malleable iron galvanised Rp

Model:

- Union Nut: PVC-C
- Union Bush: Solvent cement socket PVC-C metric
- Union End: malleable iron with parallel female thread Rp
- Gasket: O-ring EPDM code no. 748 410 006-011

d (mm)	Thread Type	Size (inch)	Code	SP	Weight (kg)
20	Rp	½	**723 530 306**	10	0.075
25	Rp	¾	**723 530 307**	5	0.112
32	Rp	1	**723 530 308**	5	0.157
40	Rp	1 ¼	**723 530 309**	2	0.300
50	Rp	1 ½	**723 530 310**	2	0.384
63	Rp	2	**723 530 311**	5	0.603

table continued on the next page

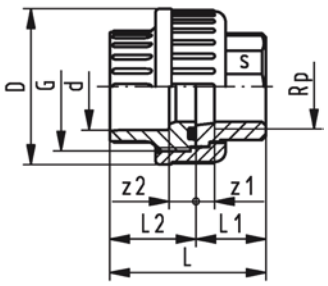

d (mm)	D (mm)	L (mm)	L1 (mm)	L2 (mm)	G (inch)	z1 (mm)	z2 (mm)	s (mm)
20	43	48	22	26	1	9	10	25
25	51	51	22	29	1 1/4	7	10	31
32	58	58	26	33	1 1/2	9	10	38
40	72	69	31	39	2	12	12	48
50	83	78	33	46	2 1/4	14	14	54
63	100	91	35	58	2 3/4	11	18	67

Adaptor union PVC-C metric malleable iron galvanised R

Model:

- Union Nut: PVC-C
- Union End: Malleable iron with taper male thread R
- Union Bush: Solvent cement socket PVC-C metric
- Gasket: O-ring EPDM code no. 748 410 006-011

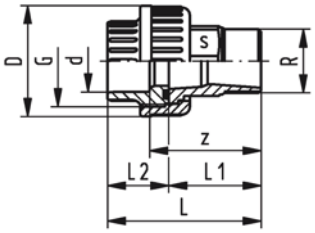

d (mm)	Thread Type	Size (inch)	Code	SP	Weight (kg)	s (mm)	L2 (mm)	G (inch)	z (mm)	L1 (mm)	D (mm)	L (mm)
20	R	½	**723 530 806**	10	0.114	25	26	1	50	40	43	66
25	R	¾	**723 530 807**	5	0.165	31	29	1 1/4	53	43	51	72
32	R	1	**723 530 808**	5	0.205	38	33	1 1/2	58	48	58	80
40	R	1 ¼	**723 530 809**	2	0.403	48	39	2	69	57	72	95
50	R	1 ½	**723 530 810**	2	0.539	54	46	2 1/4	73	59	83	104
63	R	2	**723 530 811**	8	0.787	67	58	2 3/4	80	62	100	118

Adaptor union PVC-C metric brass Rp

Model:

- Union Nut: PVC-C
- Union Bush: Solvent cement socket PVC-C metric
- Union End: Brass with parallel female thread Rp
- Gasket: O-ring EPDM code no. 748 410 006-011

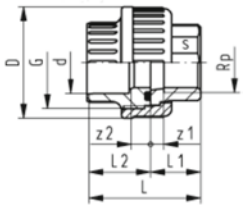

d (mm)	Thread Type	Size (inch)	PN (bar)	Code	SP	Weight (kg)
20	Rp	½	16	**723 550 506**	10	0.093
25	Rp	¾	16	**723 550 507**	5	0.152
32	Rp	1	16	**723 550 508**	5	0.198
40	Rp	1 ¼	16	**723 550 509**	2	0.351
50	Rp	1 ½	16	**723 550 510**	2	0.507
63	Rp	2	16	**723 550 511**	5	0.809

d (mm)	L1 (mm)	D (mm)	L (mm)	L2 (mm)	s (mm)	z1 (mm)	z2 (mm)	G (inch)
20	22	43	48	26	25	7	10	1
25	25	51	54	29	30	9	10	1 1/4
32	27	58	60	33	36	8	11	1 1/2
40	31	72	70	39	46	10	13	2
50	35	83	81	46	55	13	15	2 1/4
63	40	100	98	58	65	14	21	2 3/4

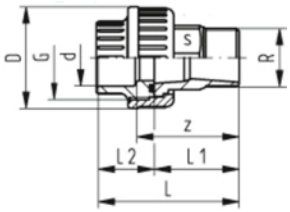

Adaptor union PVC-C metric brass R

Model:

- Union Nut: PVC-C
- Union Bush: Solvent cement socket PVC-C metric
- Union End: Brass with taper male thread R
- Gasket: O-ring EPDM code no. 748 410 006-011

d (mm)	Thread Type	Size (inch)	PN* (bar)	Code	SP	Weight (kg)
20	R	½	16	**723 550 906**	10	0.132
25	R	½	16	**723 550 957**	5	0.230
25	R	¾	16	**723 550 907**	5	0.203
25	R	1	16	**723 550 967**	5	0.312
32	R	½	16	**723 550 958**	5	0.302
32	R	¾	16	**723 550 968**	5	0.302
32	R	1	16	**723 550 908**	5	0.393
40	R	1 ¼	16	**723 550 909**	2	0.493
50	R	1 ½	16	**723 550 910**	2	1.468
63	R	2	16	**723 550 911**	2	1.103

d (mm)	z (mm)	s (mm)	G (inch)	L1 (mm)	D (mm)	L (mm)	L2 (mm)
20	47	25	1	37	43	63	26
25	47	30	1 1/4	37	51	66	29
25	52	30	1 1/4	42	51	71	29
25	56	30	1 1/4	46	51	75	29
32	48	36	1 1/2	37	58	70	33
32	53	36	1 1/2	52	58	75	33
32	57	36	1 1/2	46	58	79	33
40	65	46	2	52	72	91	39
50	71	55	2 1/4	56	83	102	46
63	87	65	2 3/4	67	100	125	58

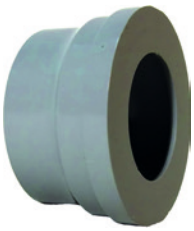

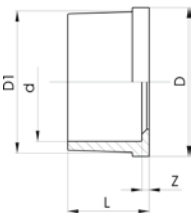

Union end PVC-C metric

Model:

- For union 723 510 105-114
- With solvent cement socket metric

*just for variable area flow meter

	d (mm)	Size (inch)	PN (bar)	Code	SP	Weight (kg)	z (mm)	D (mm)	D1 (mm)	L (mm)
	16		16	**723 800 105**	10	0.005	3	24	22	19
	20		16	**723 800 106**	10	0.010	3	30	28	21
	25		16	**723 800 107**	10	0.018	3	39	36	24
	32		16	**723 800 108**	10	0.023	3	44	41	27
	40		16	**723 800 109**	10	0.062	3	57	53	31
	50		16	**723 800 110**	10	0.064	3	63	59	34
	63		16	**723 800 111**	10	0.120	3	78	74	41
	75	2 ½	10	**723 800 162**	20	0.157	3	101	91	47
*	75	2 ½	10	**700 253 867**	1	0.155	3	97	90	47
	90		10	**723 800 163**	12	0.260	5	121	108	56
	110		10	**723 800 164**	10	0.418	5	146	131	66

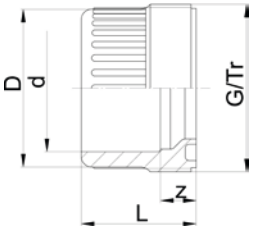

Union bush PVC-C metric

Model:

- Solvent cement socket metric
- For union 723 510 105-114
- Jointing face: with O-ring groove
- Gasket: O-ring EPDM code no. 748 410 005-016

d (mm)	Size (inch)	PN (bar)	Code	SP	Weight (kg)	z (mm)	D (mm)	L (mm)	G/Tr (inch)
16		16	**723 840 105**	10	0.009	11	24	25	3/4
20		16	**723 840 106**	10	0.014	12	28	26	1
25		16	**723 840 107**	10	0.024	11	33	29	1 1/4
32		16	**723 840 108**	10	0.038	10	41	33	1 1/2
40		16	**723 840 109**	10	0.066	12	50	39	2
50		16	**723 840 110**	10	0.083	14	62	46	2 1/4
63		16	**723 840 111**	10	0.158	19	77	58	2 3/4
75	2 ½	10	**723 840 112**	20	0.230	18	93	62	Tr108x5
90		10	**723 840 123**	12	0.381	18	110	69	Tr128x5
110		10	**723 840 114**	10	0.480	11	133	72	Tr154x6

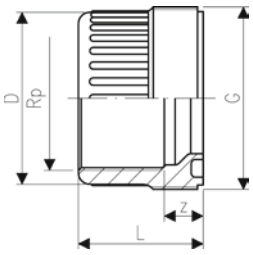

Union bush PVC-C Rp

Model:

- With parallel female thread Rp
- For union 723 510 105-114
- Jointing face: with O-ring groove
- Connection to plastic thread only
- Do not use thread sealing pastes that are harmful to PVC-C
- Gasket: O-ring EPDM code no. 748 410 005-011

Thread Type	Size (inch)	PN (bar)	Code	SP	Weight (kg)	z (mm)	D (mm)	L (mm)	G (inch)
Rp	⅜	10	**723 840 605**	10	0.010	13	24	24	3/4
Rp	½	10	**723 840 606**	10	0.015	13	29	26	1
Rp	¾	10	**723 840 607**	10	0.024	14	34	29	1 1/4
Rp	1	10	**723 840 608**	10	0.039	15	42	32	1 1/2
Rp	1 ¼	10	**723 840 609**	10	0.069	19	53	38	2
Rp	1 ½	10	**723 840 610**	10	0.092	26	63	45	2 1/4
Rp	2	10	**723 840 611**	10	0.114	33	78	56	2 3/4

Flange adaptors

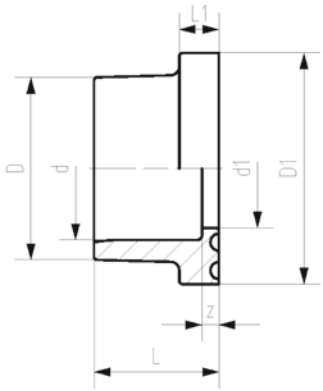

Flange adaptor PVC-C
Combined jointing face flat and serrated metric

Model:

- Gasket: flat gasket EPDM code no. 748 400 306-320
- Gasket: profile flange gasket EPDM code no. 748 440 706-720, FKM code no. 749 440 706-720
- Flanges (metric & ANSI): PVC-U, PP-V, PP-Steel

Note:

* bevel on pipe may be needed if used with butterfly valve type 037/038/039

	d (mm)	DN (mm)	PN (bar)	Code	SP	Weight (kg)	D (mm)	D1 (mm)	d1 (mm)	L (mm)	L1 (mm)	z (mm)
*	200	200	10	**723 790 119**	2	1.630	224	250	192.0	112	24	6

Ball valves electric type 543 Pro

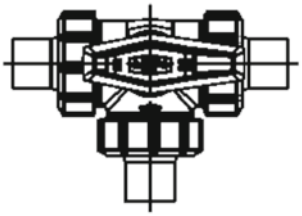

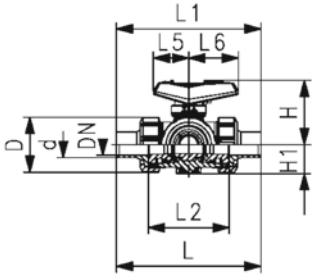

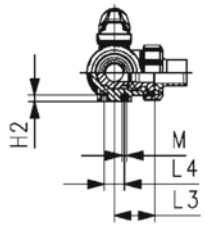

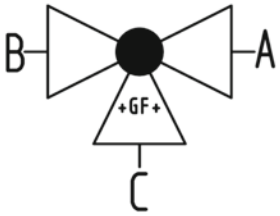

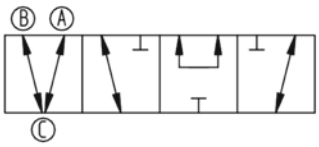

3-Way ball valve type 543 Pro PVC-C
Horizontal/T-port
With solvent cement spigots metric

Model:

- Lockable lever as standard (DN10-DN50)
- For easy installation and removal (valve end and union nut are compatible with type 546)
- Ball seat PTFE
- Angle of operation 360° without turn limiter
- Turn limiter 90° enclosed, in different positions usable as a clip-on ring
- Integrated stainless steel mounting inserts
- Delivery status A-B-C opened, see flow scheme
- Z-dimension, valve end and union nut are compatible with type 543 (1stGeneration)

Option:

- Interface-module with position feedback sensor, incl. LED feedback (DN10-50)
- Manual spring return lever ("Dead man") (DN10-25)
- Pneumatic or electric actuators from GF
- Individual configuration of the valve possible

d (mm)	DN (mm)	Size (inch)	PN (bar)	kv-value (Δp=1 bar) (l/min)	EPDM Code	SP	Weight (kg)	FKM Code	SP	Weight (kg)
16	10	⅜	10	140	**163 543 221**	1	0.264	**163 543 231**	1	0.264
20	15	½	10	200	**163 543 222**	1	0.271	**163 543 232**	1	0.271
25	20	¾	10	470	**163 543 223**	1	0.389	**163 543 233**	1	0.389
32	25	1	10	793	**163 543 224**	1	0.590	**163 543 234**	1	0.590
40	32	1 ¼	10	1290	**163 543 225**	1	1.007	**163 543 235**	1	1.007
50	40	1 ½	10	1910	**163 543 226**	1	1.487	**163 543 236**	1	1.487
63	50	2	10	3100	**163 543 227**	1	2.889	**163 543 237**	1	2.889

d (mm)	D (mm)	H (mm)	H1 (mm)	H2 (mm)	L (mm)	L1 (mm)	L2 (mm)	L3 (mm)	L4 (mm)	L5 (mm)	L6 (mm)	L7 (mm)	M	closest inch (inch)
16	50	61	28	8	131	82	73	36	25	35	47	137	6	⅜
20	50	61	28	8	141	82	73	36	25	35	47	147	6	½
25	58	74	32	8	165	106	86	43	25	44	62	171	6	¾
32	68	80	36	8	182	106	99	50	25	44	62	188	6	1
40	84	95	45	9	209	131	120	60	45	57	74	215	8	1 ¼
50	97	102	51	9	242	131	137	69	45	57	74	248	8	1 ½
63	124	117	65	9	302	152	179	89	45	66	86	308	8	2

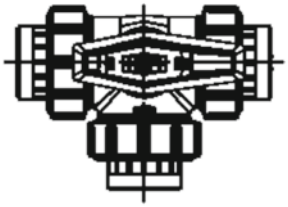

3-Way ball valve type 543 Pro PVC-C
Horizontal/T-port
With threaded sockets Rp

Model:

- Lockable lever as standard (DN10-DN50)
- For easy installation and removal (valve end and union nut are compatible with type 546)
- Ball seat PTFE
- Angle of operation 360° without turn limiter
- Turn limiter 90° enclosed, in different positions usable as a clip-on ring
- Integrated stainless steel mounting inserts
- Delivery status A-B-C opened, see flow scheme
- Z-dimension, valve end and union nut are compatible with type 543 (1stGeneration)

Option:

- Interface-module with position feedback sensor, incl. LED feedback (DN10-50)
- Manual spring return lever ("Dead man") (DN10-25)
- Pneumatic or electric actuators from GF
- Individual configuration of the valve possible

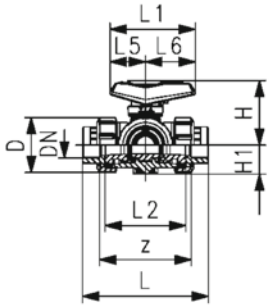

d (mm)	DN (mm)	Thread Type	Size (inch)	PN (bar)	kv-value (Δp=1 bar) (l/min)	EPDM Code	SP	Weight (kg)
16	10	Rp	⅜	10	140	**163 543 241**	1	0.264
20	15	Rp	½	10	200	**163 543 242**	1	0.271
25	20	Rp	¾	10	470	**163 543 243**	1	0.389
32	25	Rp	1	10	793	**163 543 244**	1	0.590
40	32	Rp	1 ¼	10	1290	**163 543 245**	1	1.007
50	40	Rp	1 ½	10	1910	**163 543 246**	1	1.487
63	50	Rp	2	10	3100	**163 543 247**	1	2.889

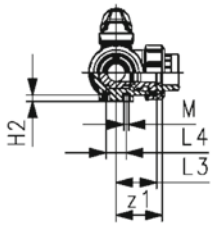

FKM Code	SP	Weight (kg)
163 543 251	1	0.264
163 543 252	1	0.271
163 543 253	1	0.389
163 543 254	1	0.590
163 543 255	1	1.007
163 543 256	1	1.487
163 543 257	1	2.889

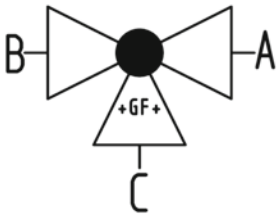

D (mm)	H (mm)	H1 (mm)	H2 (mm)	L (mm)	L1 (mm)	L2 (mm)	L3 (mm)	L4 (mm)	L5 (mm)	L6 (mm)	M	z (mm)	z1 (mm)
50	61	28	8	113	82	73	36	25	35	47	6	87	43
50	61	28	8	116	82	73	36	25	35	47	6	85	42
58	74	32	8	135	106	86	43	25	44	62	6	100	50
68	80	36	8	155	106	99	50	25	44	62	6	113	57
84	95	45	9	179	131	120	60	45	57	74	8	134	67
97	102	51	9	201	131	137	69	45	57	74	8	155	78
124	117	65	9	255	152	179	89	45	66	86	8	199	99

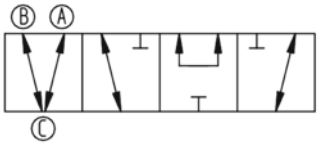

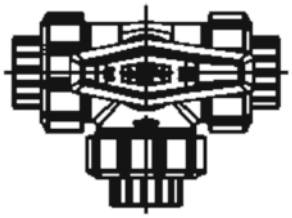

3-Way ball valve type 543 Pro PVC-C
Horizontal/T-port
With solvent cement sockets metric

Model:

- Lockable lever as standard (DN10-DN50)
- For easy installation and removal (valve end and union nut are compatible with type 546)
- Ball seat PTFE
- Angle of operation 360° without turn limiter
- Turn limiter 90° enclosed, in different positions usable as a clip-on ring
- Integrated stainless steel mounting inserts
- Delivery status A-B-C opened, see flow scheme
- Z-dimension, valve end and union nut are compatible with type 543 (1stGeneration)

Option:

- Interface-module with position feedback sensor, incl. LED feedback (DN10-50)
- Manual spring return lever ("Dead man") (DN10-25)
- Pneumatic or electric actuators from GF
- Individual configuration of the valve possible

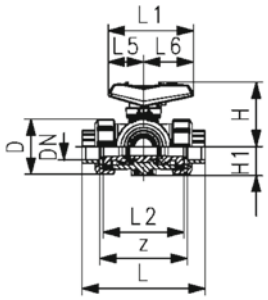

d (mm)	DN (mm)	Size (inch)	PN (bar)	kv-value (Δp=1 bar) (l/min)	EPDM Code	SP	Weight (kg)	FKM Code	SP	Weight (kg)
16	10	⅜	10	140	**163 543 201**	1	0.264	**163 543 211**	1	0.264
20	15	½	10	200	**163 543 202**	1	0.271	**163 543 212**	1	0.271
25	20	¾	10	470	**163 543 203**	1	0.389	**163 543 213**	1	0.389
32	25	1	10	793	**163 543 204**	1	0.561	**163 543 214**	1	0.590
40	32	1 ¼	10	1290	**163 543 205**	1	1.007	**163 543 215**	1	1.007
50	40	1 ½	10	1910	**163 543 206**	1	1.487	**163 543 216**	1	1.487
63	50	2	10	3100	**163 543 207**	1	2.889	**163 543 217**	1	2.889

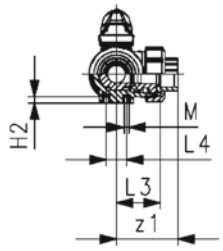

d (mm)	D (mm)	H (mm)	H1 (mm)	H2 (mm)	L (mm)	L1 (mm)	L2 (mm)	L3 (mm)	L4 (mm)	L5 (mm)	L6 (mm)	M	z (mm)	z1 (mm)	closest inch (inch)
16	50	61	28	8	109	82	73	36	25	35	47	6	81	40	⅜
20	50	61	28	8	112	82	73	36	25	35	47	6	81	40	½
25	58	74	32	8	131	106	86	43	25	44	62	6	94	47	¾
32	68	80	36	8	151	106	99	50	25	44	62	6	107	54	1
40	84	95	45	9	181	131	120	60	45	57	74	8	130	65	1 ¼
50	97	102	51	9	205	131	137	69	45	57	74	8	143	72	1 ½
63	124	117	65	9	261	152	179	89	45	66	86	8	185	92	2

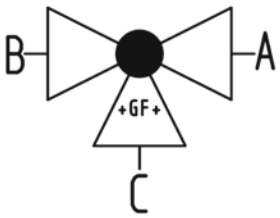

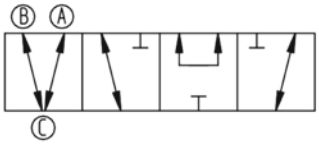

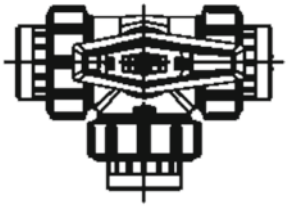

3-Way ball valve type 543 Pro PVC-C
Horizontal/L-port
With threaded sockets Rp

Model:

- Lockable lever as standard (DN10-DN50)
- For easy installation and removal (valve end and union nut are compatible with type 546)
- Ball seat PTFE
- Angle of operation 360° without turn limiter
- Turn limiter 90° enclosed, in different positions usable as a clip-on ring
- Integrated stainless steel mounting inserts
- Delivery status A-C opened, see flow scheme
- Z-dimension, valve end and union nut are compatible with type 543 (1stGeneration)

Option:

- Interface-module with position feedback sensor, incl. LED feedback (DN10-50)
- Manual spring return lever ("Dead man") (DN10-25)
- Pneumatic or electric actuators from GF
- Individual configuration of the valve possible

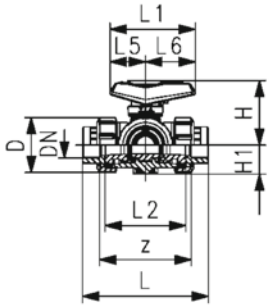

d (mm)	DN (mm)	Thread Type	Size (inch)	PN (bar)	kv-value (Δp=1 bar) (l/min)	EPDM Code	SP	Weight (kg)
16	10	Rp	⅜	10	50	**163 543 041**	1	0.265
20	15	Rp	½	10	75	**163 543 042**	1	0.272
25	20	Rp	¾	10	150	**163 543 043**	1	0.391
32	25	Rp	1	10	280	**163 543 044**	1	0.598
40	32	Rp	1 ¼	10	480	**163 543 045**	1	1.018
50	40	Rp	1 ½	10	620	**163 543 046**	1	1.509
63	50	Rp	2	10	1230	**163 543 047**	1	2.938

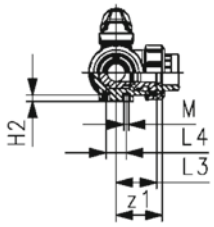

FKM Code	SP	Weight (kg)
163 543 051	1	0.265
163 543 052	1	0.272
163 543 053	1	0.391
163 543 054	1	0.598
163 543 055	1	1.018
163 543 056	1	1.509
163 543 057	1	2.938

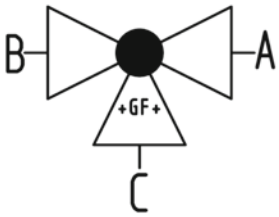

D (mm)	H (mm)	H1 (mm)	H2 (mm)	L (mm)	L1 (mm)	L2 (mm)	L3 (mm)	L4 (mm)	L5 (mm)	L6 (mm)	M	z (mm)	z1 (mm)
50	61	28	8	113	82	73	36	25	35	47	6	87	43
50	61	28	8	116	82	73	36	25	35	47	6	85	42
58	74	32	8	135	106	86	43	25	44	62	6	100	50
68	80	36	8	155	106	99	50	25	44	62	6	113	57
84	95	45	9	179	131	120	60	45	57	74	8	134	67
97	102	51	9	201	131	137	69	45	57	74	8	155	78
124	117	65	9	255	152	179	89	45	66	86	8	199	99

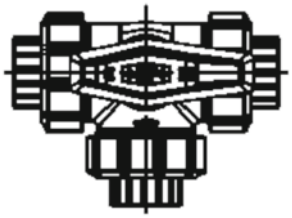

3-Way ball valve type 543 Pro PVC-C
Horizontal/L-port
With solvent cement sockets metric

Model:

- Lockable lever as standard (DN10-DN50)
- For easy installation and removal (valve end and union nut are compatible with type 546)
- Ball seat PTFE
- Angle of operation 360° without turn limiter
- Turn limiter 90° enclosed, in different positions usable as a clip-on ring
- Integrated stainless steel mounting inserts
- Delivery status A-C opened, see flow scheme
- Z-dimension, valve end and union nut are compatible with type 543 (1stGeneration)

Option:

- Interface-module with position feedback sensor, incl. LED feedback (DN10-50)
- Manual spring return lever ("Dead man") (DN10-25)
- Pneumatic or electric actuators from GF
- Individual configuration of the valve possible

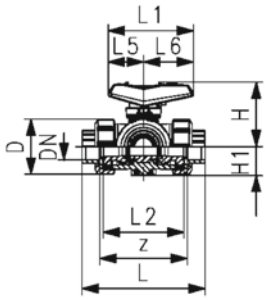

d (mm)	DN (mm)	Size (inch)	PN (bar)	kv-value (Δp=1 bar) (l/min)	EPDM Code	SP	Weight (kg)	FKM Code	SP	Weight (kg)
16	10	⅜	10	50	**163 543 001**	1	0.265	**163 543 011**	1	0.265
20	15	½	10	75	**163 543 002**	1	0.272	**163 543 012**	1	0.272
25	20	¾	10	150	**163 543 003**	1	0.391	**163 543 013**	1	0.391
32	25	1	10	280	**163 543 004**	1	0.598	**163 543 014**	1	0.598
40	32	1 ¼	10	480	**163 543 005**	1	1.018	**163 543 015**	1	1.018
50	40	1 ½	10	620	**163 543 006**	1	1.509	**163 543 016**	1	1.509
63	50	2	10	1230	**163 543 007**	1	2.938	**163 543 017**	1	2.938

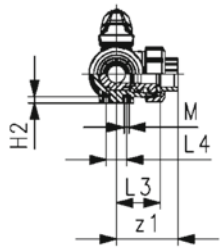

d (mm)	D (mm)	H (mm)	H1 (mm)	H2 (mm)	L (mm)	L1 (mm)	L2 (mm)	L3 (mm)	L4 (mm)	L5 (mm)	L6 (mm)	M	z (mm)	z1 (mm)	closest inch (inch)
16	50	61	28	8	109	82	73	36	25	35	47	6	81	40	⅜
20	50	61	28	8	112	82	73	36	25	35	47	6	81	40	½
25	58	74	32	8	131	106	86	43	25	44	62	6	94	47	¾
32	68	80	36	8	151	106	99	50	25	44	62	6	107	54	1
40	84	95	45	9	181	131	120	60	45	57	74	8	130	65	1 ¼
50	97	102	51	9	205	131	137	69	45	57	74	8	143	72	1 ½
63	124	117	65	9	261	152	179	89	45	66	86	8	185	92	2

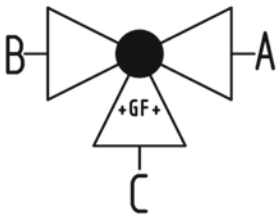

Ball valves type 546 Pro

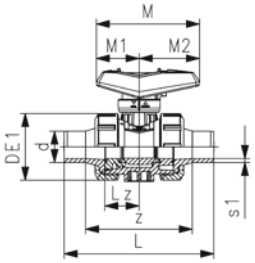

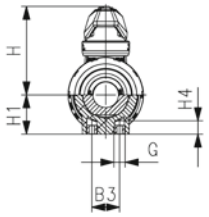

PVC-C Ball Valve type 546 Pro
With solvent cement spigots PVC-C ISO

Model:

- Lockable lever as standard (DN10-DN50)
- Ball seat PTFE
- Integrated stainless steel mounting inserts
- z-dimension, valve end and union nut are compatible with type 546 (1st Generation)

Option:

- Interface module for position feedback sensor with LED (PNP, NPN and NAMUR)
- Manual spring return lever ("Dead man") (DN10-25)
- Pneumatic or electric actuators from GF
- Individual configuration of valves possible

d (mm)	DN (mm)	Size (inch)	PN (bar)	kv-value (Δp=1 bar) (l/min)	EPDM Code	SP	Weight (kg)	FKM Code	SP	Weight (kg)
16	10	⅜	16	70	**163 546 381**	1	0.162	**163 546 391**	1	0.162
20	15	½	16	185	**163 546 382**	1	0.162	**163 546 392**	1	0.162
25	20	¾	16	350	**163 546 383**	1	0.247	**163 546 393**	1	0.247
32	25	1	16	700	**163 546 384**	1	0.367	**163 546 394**	1	0.367
40	32	1 ¼	16	1000	**163 546 385**	1	0.665	**163 546 395**	1	0.665
50	40	1 ½	16	1600	**163 546 386**	1	0.895	**163 546 396**	1	0.895
63	50	2	16	3100	**163 546 387**	1	1.655	**163 546 397**	1	1.655
75	65	2 ½	16	5000	**163 546 388**	1	5.500	**163 546 398**	1	5.500
90	80	3	16	7000	**163 546 389**	1	8.200	**163 546 399**	1	8.200
110	100	4	16	11000	**163 546 390**	1	12.900	**163 546 400**	1	12.900

d (mm)	B3 (mm)	DE1 (mm)	G (mm)	H (mm)	H1 (mm)	H4 (mm)	L (mm)	Lz (mm)	M (mm)	M1 (mm)	M2 (mm)	s1 (mm)	z (mm)
16	25	50	M6	60.5	27	12	114	28	82	35	47	3.0	88
20	25	50	M6	60.5	27	12	124	28	82	35	47	3.0	96
25	25	58	M6	74.0	30	12	143	33	106	44	62	3.0	112
32	25	68	M6	80.0	36	12	154	36	106	44	62	4.0	118
40	45	84	M8	95.0	44	15	174	43	131	57	74	4.5	134
50	45	97	M8	101.5	51	15	194	45	131	57	74	5.5	148
63	45	124	M8	116.5	64	15	224	51	152	66	86	7.0	170
75	70	166	M8	169.0	85	15	284	68	270	64	205	8.5	194
90	70	200	M8	180.0	105	15	300	71	270	64	205	10.0	196
110	120	238	M12	194.0	123	22	340	82	326	71	255	12.0	212

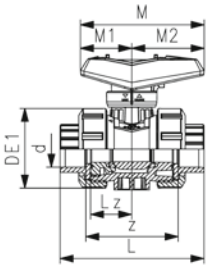

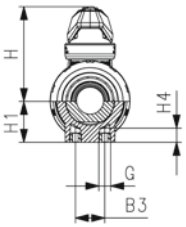

PVC-C Ball Valve type 546 Pro
With solvent cement sockets PVC-C ISO

Model:

- Lockable lever as standard
- Ball seat PTFE
- Integrated stainless steel mounting inserts
- z-dimension, valve end and union nut are compatible with type 546 (1st Generation)

Option:

- Interface module for position feedback sensor with LED (PNP, NPN and NAMUR)
- Manual spring return lever "Dead man" (DN10-25)
- Pneumatic or electric actuators from GF
- Individual configuration of valves possible

d (mm)	DN (mm)	Size (inch)	PN (bar)	kv-value (Δp=1 bar) (l/min)	EPDM Code	SP	Weight (kg)	FKM Code	SP	Weight (kg)
16	10	⅜	16	70	**163 546 061**	1	0.160	**163 546 071**	1	0.160
20	15	½	16	185	**163 546 062**	1	0.169	**163 546 072**	1	0.160
25	20	¾	16	350	**163 546 063**	1	0.255	**163 546 073**	1	0.245
32	25	1	16	700	**163 546 064**	1	0.370	**163 546 074**	1	0.373
40	32	1 ¼	16	1000	**163 546 065**	1	0.648	**163 546 075**	1	0.658
50	40	1 ½	16	1600	**163 546 066**	1	0.894	**163 546 076**	1	0.890
63	50	2	16	3100	**163 546 067**	1	1.653	**163 546 077**	1	1.662
75	65	2 ½	16	5000	**163 546 068**	1	3.552	**163 546 078**	1	4.122
90	80	3	16	7000	**163 546 069**	1	6.646	**163 546 079**	1	6.698
110	100	4	16	11000	**163 546 070**	1	9.697	**163 546 080**	1	12.700

d (mm)	B3 (mm)	DE1 (mm)	G (mm)	H (mm)	H1 (mm)	H4 (mm)	L (mm)	Lz (mm)	M (mm)	M1 (mm)	M2 (mm)	z (mm)
16	25	50	M6	60.5	27	12	92	28	82	35	47	64
20	25	50	M6	60.5	27	12	95	28	82	35	47	64
25	25	58	M6	74.0	30	12	110	33	106	44	62	72
32	25	68	M6	80.0	36	12	123	36	106	44	62	79
40	45	84	M8	95.0	44	15	146	43	131	57	74	94
50	45	97	M8	101.5	51	15	157	45	131	57	74	95
63	45	124	M8	116.5	64	15	183	51	152	66	86	107
75	70	166	M8	169.0	85	15	233	68	270	64	205	144
90	120	200	M8	180.0	105	15	254	71	270	64	205	151
110	120	238	M12	194.0	123	22	301	82	326	71	255	174

PVC-C Ball Valve type 546 Pro
With threaded sockets PVC-C ISO Rp

Model:

- Lockable lever as standard
- Ball seat PTFE
- Integrated stainless steel mounting inserts
- z-dimension, valve end and union nut are compatible with type 546 (1st Generation)

Option:

- Interface module for position feedback sensor with LED (PNP, NPN and NAMUR)
- Manual spring return lever "Dead man" (DN10-25)
- Pneumatic or electric actuators from GF
- Individual configuration of valves possible

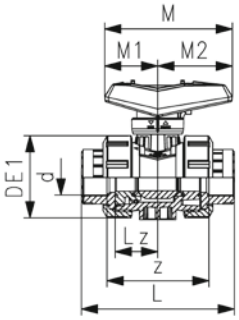

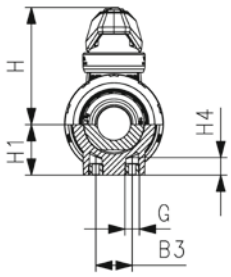

d (mm)	DN (mm)	Size (inch)	PN (bar)	kv-value (Δp=1 bar) (l/min)	EPDM Code	SP	Weight (kg)	FKM Code	SP	Weight (kg)
16	10	⅜	10	70	**163 546 401**	1	0.162	**163 546 411**	1	0.162
20	15	½	10	185	**163 546 402**	1	0.162	**163 546 412**	1	0.162
25	20	¾	10	350	**163 546 403**	1	0.247	**163 546 413**	1	0.247
32	25	1	10	700	**163 546 404**	1	0.367	**163 546 414**	1	0.367
40	32	1 ¼	10	1000	**163 546 405**	1	0.665	**163 546 415**	1	0.665
50	40	1 ½	10	1600	**163 546 406**	1	0.895	**163 546 416**	1	0.895
63	50	2	10	3100	**163 546 407**	1	1.655	**163 546 417**	1	1.655
75	65	2 ½	10	5000	**163 546 408**	1	5.400	**163 546 418**	1	5.400
90	80	3	10	7000	**163 546 409**	1	8.100	**163 546 419**	1	8.100
110	100	4	10	11000	**163 546 410**	1	12.700	**163 546 420**	1	12.700

d (mm)	B3 (mm)	DE1 (mm)	G (mm)	H (mm)	H1 (mm)	H4 (mm)	L (mm)	Lz (mm)	M (mm)	M1 (mm)	M2 (mm)	z (mm)
16	25	50	M6	60.5	27	12	95	28	82	35	47	69
20	25	50	M6	60.5	27	12	100	28	82	35	47	67
25	25	58	M6	74.0	30	12	114	33	106	44	62	78
32	25	68	M6	80.0	36	12	127	36	106	44	62	85
40	45	84	M8	95.0	44	15	146	43	131	57	74	100
50	45	97	M8	101.5	51	15	152	45	131	57	74	106
63	45	124	M8	116.5	64	15	177	51	152	66	86	121
75	70	166	M8	169.0	85	15	233	68	270	64	205	144
90	70	200	M8	180.0	105	15	254	71	270	64	205	151
110	120	238	M12	194.0	123	22	301	82	326	71	255	174

PVC-C Ball Valve type 546 Pro
With backing flanges PP-St Iso with PVC-C

Model:

- Lockable lever as standard
- Ball seat PTFE
- Integrated stainless steel mounting inserts
- z-dimension, valve end and union nut are compatible with type 546 (1st Generation)

Option:

- Interface module for position feedback sensor with LED (PNP, NPN and NAMUR)
- Manual spring return lever "Dead man" (DN10-25)
- Pneumatic or electric actuators from GF
- Individual configuration of valves possible

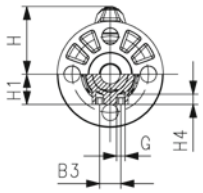

d (mm)	DN (mm)	Size (inch)	PN (bar)	kv-value (Δp=1 bar) (l/min)	EPDM Code	SP	Weight (kg)	FKM Code	SP	Weight (kg)
75	65	2 ½	16	5000	**163 546 108**	1	6.000	**163 546 118**	1	6.546
90	80	3	16	7000	**163 546 109**	1	9.501	**163 546 119**	1	9.320
110	100	4	16	11000	**163 546 110**	1	14.200	**163 546 120**	1	14.200

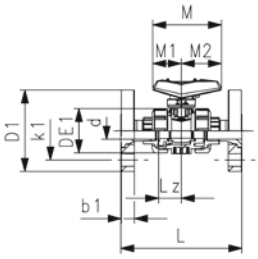

d (mm)	b1 (mm)	B3 (mm)	D1 (mm)	DE1 (mm)	H (mm)	G (mm)	H1 (mm)	H4 (mm)	k1 (mm)	L (mm)	Lz (mm)	M (mm)	M1 (mm)	M2 (mm)
75	18	70	166	166	169	M8	85	15	145	290	68	270	64	205
90	20	70	200	200	180	M8	105	15	160	310	71	270	64	205
110	20	120	238	238	194	M12	123	22	180	350	82	326	71	255

Product Configurator

Create your own ball valve

Electric Actuator

T01	EA 11 24V with Cable Plug
T02	EA 11 100-230V with Cable Plug
T07	EA 25 24V with Cable Plug
T08	EA 25 100-230V with Cable Plug
T09	EA 120 24V with Cable Plug
T10	EA 120 100-230V with Cable Plug
T11	EA 250 24V with Cable Plug
T12	EA 250 100-230V with Cable Plug

Angle (Open/ Close)

W45	45°
W90	90°
W180	180°

Middle Position

W17	No
W18	Yes

Colour Assignment Feedback

W20	Open = rot
W21	Open= grün

Position Feedback

W23	Open/ Close
W24	Open/ Close/ Middle
W25	Middle

Wiring Feedback

W26	NC
W28	NO

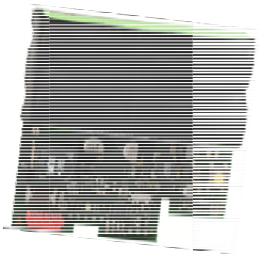

Heating Threshold

W29	5°
...	[5° steps]
W37	45°

Failsafe Return unit

W39	Integrated (Battery powered)
W40	External (no Battery - 24V needed)

Accessory

W42	Positioner
W43	Monitoring
W44	Profibus

Setting Positioner

W46	BCD = 0
...	
W55	BCD = 9

Setting Motor Current

W56	BCD = 0
...	
W65	BCD = 9

Setting Cycle Time Extension

W66	BCD = 0
...	
W75	BCD = 9

Setting Cycle Time Monitoring

W76	BCD = 0
...	
W85	BCD = 9

Setting Cycle Counter

W86	BCD = 0
...	
W96	BCD = 9

T08	W90	W17	W20	W23	W26	W29	W39	W42	W46	W65	-	-	-	=

Ball valves electric type 167

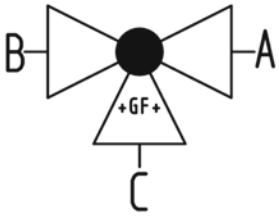

3-Way ball valve type 167 PVC-C
Horizontal/L-port 100-230V
With manual emergency override
With solvent cement sockets metric

Model:

- Voltage 100-230V, 50-60Hz
- Factory set control range 90°<)
- Basic position A-C opened, activated position B-C opened, see flow scheme
- Other positions possible by adjusting the limit switches
- Heating element, position feedback (Open/Close/ Middle)
- Integrated stainless steel mounting inserts

Option:

- Optional accessories: Fail-safe return unit, Monitoring board, Position controller, Profibus DP board

d (mm)	DN (mm)	Size (inch)	PN (bar)	kv-value (Δp=1 bar) (l/min)	EA	EPDM Code	SP	Weight (kg)
16	10	⅜	10	50	EA25	**199167102_old**	1	2.143
20	15	½	10	75	EA25	**199167103_old**	1	2.149
25	20	¾	10	150	EA25	**199167104_old**	1	2.287
32	25	1	10	280	EA25	**199167105_old**	1	2.493
40	32	1 ¼	10	480	EA25	**199167106_old**	1	2.950
50	40	1 ½	10	620	EA25	**199167107_old**	1	3.441
63	50	2	10	1230	EA25	**199167108_old**	1	4.916

FKM Code	SP	Weight (kg)
199167112_old	1	2.143
199167113_old	1	2.149
199167114_old	1	2.287
199167115_old	1	2.493
199167116_old	1	2.950
199167117_old	1	3.441
199167118_old	1	4.916

D (mm)	H (mm)	H1 (mm)	H2 (mm)	H3 (mm)	H5 (mm)	H6 (mm)	L (mm)	L1 (mm)	L2 (mm)	L3 (mm)	L4 (mm)	L5 (mm)	L6 (mm)	L7 (mm)	L8 (mm)
50	231	28	64	94	167	8	109	180	73	36	25	97	83	122	33
50	231	28	64	94	167	8	112	180	73	36	25	97	83	122	33
58	240	32	73	94	167	8	131	180	86	43	25	97	83	122	33
68	240	36	73	94	167	8	151	180	99	50	25	97	83	122	33
84	251	45	84	94	167	9	181	180	120	60	45	97	83	122	33
97	251	51	84	94	167	9	205	180	137	69	45	97	83	122	33
124	273	65	106	94	167	9	261	180	179	89	45	97	83	122	33

M	z (mm)	z1 (mm)	closest inch (inch)
6	81	40	⅜
6	81	40	½
6	94	47	¾

table continued on the next page

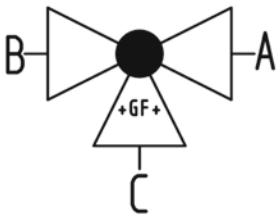

M	z (mm)	z1 (mm)	closest inch (inch)
6	107	54	1
8	130	65	1 ¼
8	143	72	1 ½
8	185	92	2

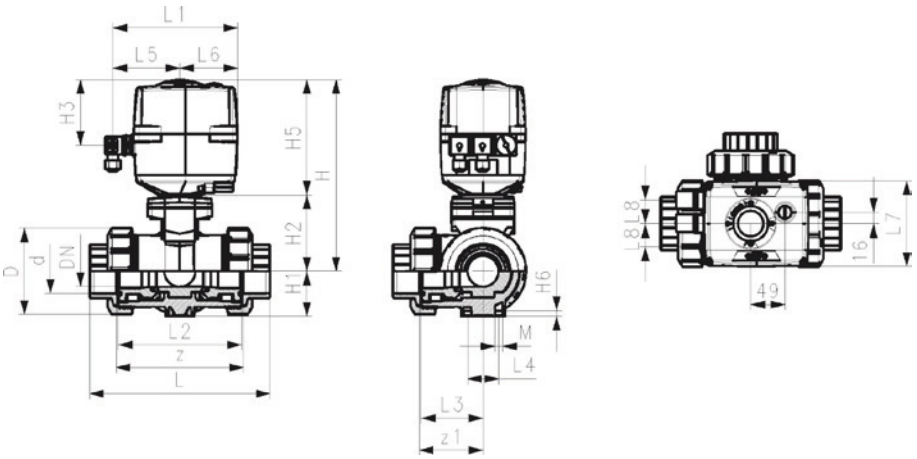

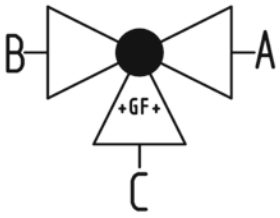

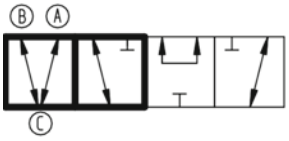

3-Way ball valve type 167 PVC-C
Horizontal/T-port 100-230V
With manual emergency override
With solvent cement sockets metric

Model:

- Voltage 100-230V, 50-60Hz
- Factory set control range 90°<)
- Basic position A-B-C opened, activated position B-C opened, see flow scheme
- Other positions possible by adjusting the limit switches
- Heating element, position feedback (Open/Close/ Middle)
- Integrated stainless steel mounting inserts

Option:

- Optional accessories: Fail-safe return unit, Monitoring board, Position controller, Profibus DP board

d (mm)	DN (mm)	Size (inch)	PN (bar)	kv-value (Δp=1 bar) (l/min)	EA	EPDM Code	SP	Weight (kg)
16	10	⅜	10	140	EA25	**199167142_old**	1	2.142
20	15	½	10	200	EA25	**199167143_old**	1	2.148
25	20	¾	10	470	EA25	**199167144_old**	1	2.285
32	25	1	10	793	EA25	**199167145_old**	1	2.486
40	32	1 ¼	10	1290	EA25	**199167146_old**	1	2.939
50	40	1 ½	10	1910	EA25	**199167147_old**	1	3.419
63	50	2	10	3100	EA25	**199167148_old**	1	4.867

d (mm)	FKM Code	SP	Weight (kg)
16	**199167152_old**	1	2.142
20	**199167153_old**	1	2.148
25	**199167154_old**	1	2.285
32	**199167155_old**	1	2.486
40	**199167156_old**	1	2.939
50	**199167157_old**	1	3.419
63	**199167158_old**	1	4.867

table continued on the next page

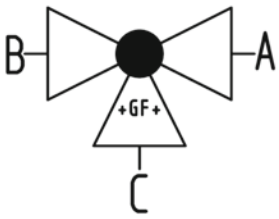

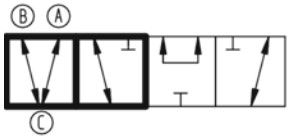

d (mm)	D (mm)	H (mm)	H1 (mm)	H2 (mm)	H3 (mm)	H5 (mm)	H6 (mm)	L (mm)	L1 (mm)	L2 (mm)	L3 (mm)	L4 (mm)	L5 (mm)	L6 (mm)	L7 (mm)
16	50	231	28	64	94	167	8	109	180	73	36	25	97	83	122
20	50	231	28	64	94	167	8	112	180	73	36	25	97	83	122
25	58	240	32	73	94	167	8	131	180	86	43	25	97	83	122
32	68	240	36	73	94	167	8	151	180	99	50	25	97	83	122
40	84	251	45	84	94	167	9	181	180	120	60	45	97	83	122
50	97	251	51	84	94	167	9	205	180	137	69	45	97	83	122
63	124	273	65	106	94	167	9	261	180	179	89	45	97	83	122

d (mm)	L8 (mm)	M	z (mm)	z1 (mm)	closest inch (inch)
16	33	6	81	40	⅜
20	33	6	81	40	½
25	33	6	94	47	¾
32	33	6	107	54	1
40	33	8	130	65	1 ¼
50	33	8	143	72	1 ½
63	33	8	185	92	2

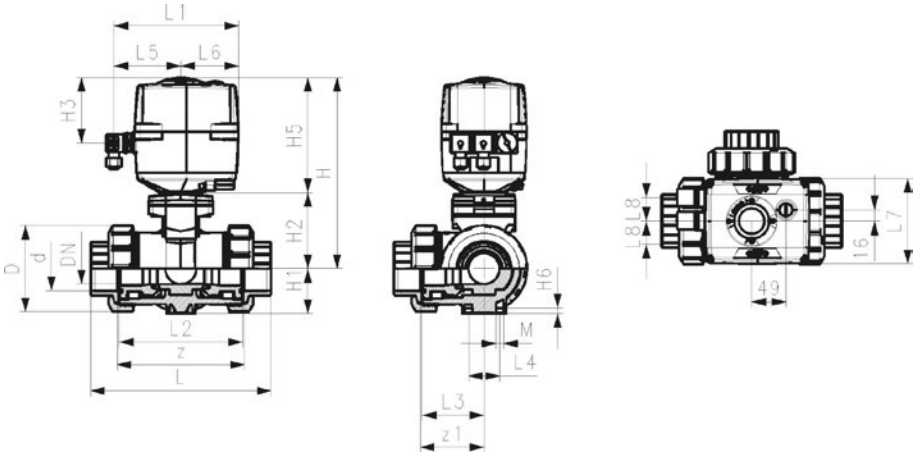

3-Way ball valve type 167 PVC-C
Horizontal/L-port 24V
With manual emergency override
With solvent cement sockets metric

Model:

- Voltage 24V AC/DC
- Factory set control range 90°<)
- Basic position A-C opened, activated position B-C opened, see flow scheme
- Other positions possible by adjusting the limit switches
- Heating element, position feedback (Open/Close/ Middle)
- Integrated stainless steel mounting inserts

Option:

- Optional accessories: Fail-safe return unit, Monitoring board, Position controller, Profibus DP board

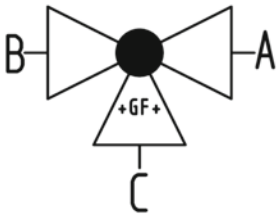

d (mm)	DN (mm)	Size (inch)	PN (bar)	kv-value (Δp=1 bar) (l/min)	EA	EPDM Code	SP	Weight (kg)
16	10	⅜	10	50	EA25	**199167262_old**	1	2.143
20	15	½	10	75	EA25	**199167263_old**	1	2.149
25	20	¾	10	150	EA25	**199167264_old**	1	2.287
32	25	1	10	280	EA25	**199167265_old**	1	2.493
40	32	1 ¼	10	480	EA25	**199167266_old**	1	2.950
50	40	1 ½	10	620	EA25	**199167267_old**	1	3.766
63	50	2	10	1230	EA25	**199167268_old**	1	4.916

table continued on the next page

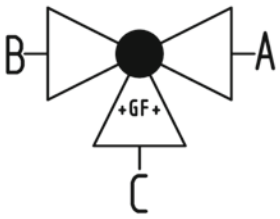

d (mm)	FKM Code	SP	Weight (kg)
16	**199167272_old**	1	2.143
20	**199167273_old**	1	2.149
25	**199167274_old**	1	2.287
32	**199167275_old**	1	2.493
40	**199167276_old**	1	2.950
50	**199167277_old**	1	3.441
63	**199167278_old**	1	4.916

d (mm)	D (mm)	H (mm)	H1 (mm)	H2 (mm)	H3 (mm)	H5 (mm)	H6 (mm)	L (mm)	L1 (mm)	L2 (mm)	L3 (mm)	L4 (mm)	L5 (mm)	L6 (mm)	L7 (mm)
16	50	231	28	64	94	167	8	109	180	73	36	25	97	83	122
20	50	231	28	64	94	167	8	112	180	73	36	25	97	83	122
25	58	240	32	73	94	167	8	131	180	86	43	25	97	83	122
32	68	240	36	73	94	167	8	151	180	99	50	25	97	83	122
40	84	251	45	84	94	167	9	181	180	120	60	45	97	83	122
50	97	251	51	84	94	167	9	205	180	137	69	45	97	83	122
63	124	273	65	106	94	167	9	261	180	179	89	45	97	83	122

d (mm)	L8 (mm)	M	z (mm)	z1 (mm)	closest inch (inch)
16	33	6	81	40	⅜
20	33	6	81	40	½
25	33	6	94	47	¾
32	33	6	107	54	1
40	33	8	130	65	1 ¼
50	33	8	143	72	1 ½
63	33	8	185	92	2

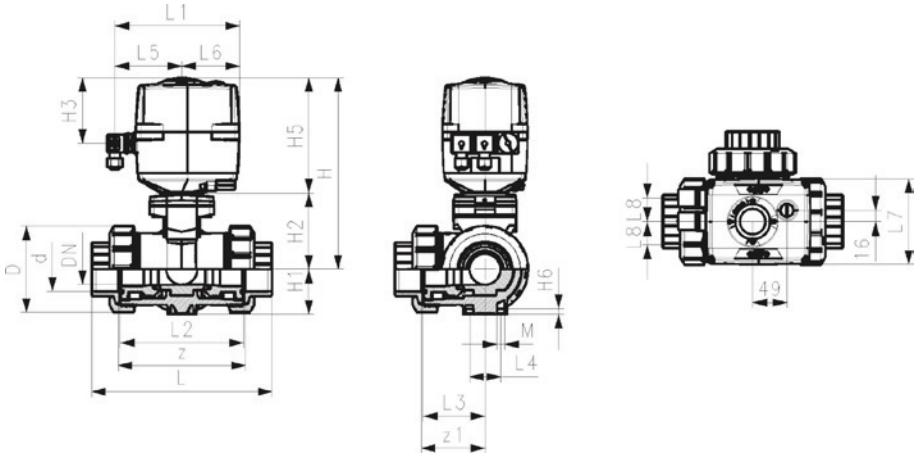

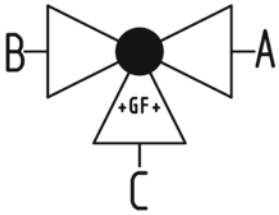

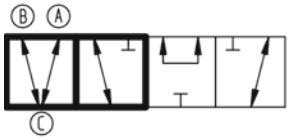

3-Way ball valve type 167 PVC-C
Horizontal/T-port 24V
With manual emergency override
With solvent cement sockets metric

Model:

- Voltage 24V AC/DC
- Factory set control range 90°<)
- Basic position A-B-C opened, activated position B-C opened, see flow scheme
- Other positions possible by adjusting the limit switches
- Heating element, position feedback (Open/Close/ Middle)
- Integrated stainless steel mounting inserts

Option:

- Optional accessories: Fail-safe return unit, Monitoring board, Position controller, Profibus DP board

d (mm)	DN (mm)	Size (inch)	PN (bar)	kv-value (Δp=1 bar) (l/min)	EA	EPDM Code	SP	Weight (kg)
16	10	⅜	10	140	EA25	**199167322_old**	1	2.142
20	15	½	10	200	EA25	**199167323_old**	1	2.148
25	20	¾	10	470	EA25	**199167324_old**	1	2.285
32	25	1	10	793	EA25	**199167325_old**	1	2.486
40	32	1 ¼	10	1290	EA25	**199167326_old**	1	2.939
50	40	1 ½	10	1910	EA25	**199167327_old**	1	3.419
63	50	2	10	3100	EA25	**199167328_old**	1	4.867

d (mm)	FKM Code	SP	Weight (kg)
16	**199167332_old**	1	2.142
20	**199167333_old**	1	2.148
25	**199167334_old**	1	2.285
32	**199167335_old**	1	2.486
40	**199167336_old**	1	2.939
50	**199167337_old**	1	3.419
63	**199167338_old**	1	4.867

d (mm)	D (mm)	H (mm)	H1 (mm)	H2 (mm)	H3 (mm)	H5 (mm)	H6 (mm)	L (mm)	L1 (mm)	L2 (mm)	L3 (mm)	L4 (mm)	L5 (mm)	L6 (mm)	L7 (mm)
16	50	231	28	64	94	167	8	109	180	73	36	25	97	83	122
20	50	231	28	64	94	167	8	112	180	73	36	25	97	83	122
25	58	240	32	73	94	167	8	131	180	86	43	25	97	83	122
32	68	240	36	73	94	167	8	151	180	99	50	25	97	83	122
40	84	251	45	84	94	167	9	181	180	120	60	45	97	83	122
50	97	251	51	84	94	167	9	205	180	137	69	45	97	83	122
63	124	273	65	106	94	167	9	261	180	179	89	45	97	83	122

d (mm)	L8 (mm)	M	z (mm)	z1 (mm)	closest inch (inch)
16	33	6	81	40	⅜
20	33	6	81	40	½
25	33	6	94	47	¾

table continued on the next page

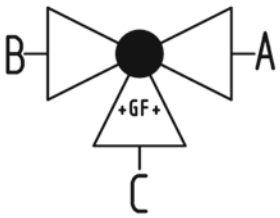

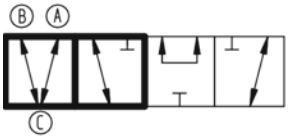

d (mm)	L8 (mm)	M	z (mm)	z1 (mm)	closest inch (inch)
32	33	6	107	54	1
40	33	8	130	65	1 ¼
50	33	8	143	72	1 ½
63	33	8	185	92	2

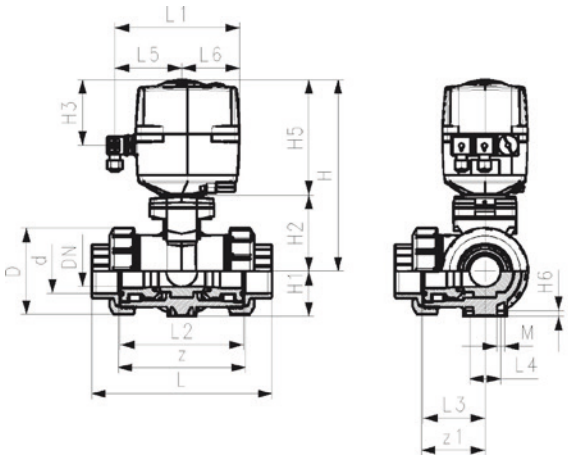

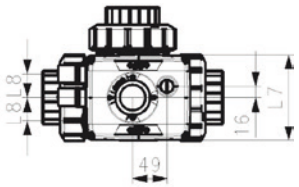

Ball valves electric type 179

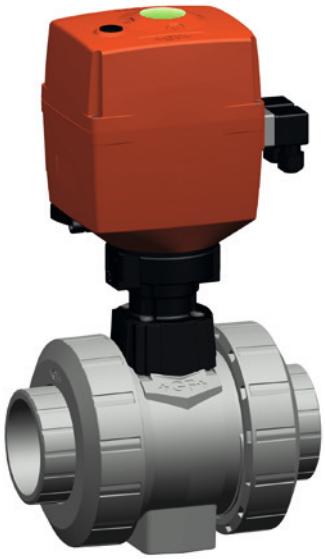

Ball valve type 179 PVC-C 100-230V
With manual emergency override
With solvent cement sockets metric

Model:

- Voltage 100-230V, 50-60Hz
- Factory set control range 90°<)
- Heating element, position feedback (Open/Close/ Middle)
- Integrated stainless steel mounting inserts

Option:

- Other valve and actuator configurations available
- Optional accessories: Fail-safe return unit, Monitoring board, Position controller, Profibus DP board

d (mm)	DN (mm)	PN (bar)	kv-value (Δp=1 bar) (l/min)	EA	EPDM Code	Weight (kg)	FKM Code	Weight (kg)
16	10	10	70	EA25	**199 179 402**	2.100	**199 179 412**	2.100
20	15	10	185	EA25	**199 179 403**	2.100	**199 179 413**	2.100
25	20	10	350	EA25	**199 179 404**	2.200	**199 179 414**	2.200
32	25	10	700	EA25	**199 179 405**	2.300	**199 179 415**	2.695
40	32	10	1000	EA25	**199 179 406**	2.600	**199 179 416**	2.600
50	40	10	1600	EA25	**199 179 407**	3.000	**199 179 417**	3.213
63	50	10	3100	EA25	**199 179 408**	3.800	**199 179 418**	3.800
75	65	10	5000	EA45	**199 179 409**	7.700	**199 179 419**	7.700
90	80	10	7000	EA120	**199 179 410**	10.400	**199 179 420**	10.400
110	100	10	11000	EA120	**199 179 411**	15.100	**199 179 421**	15.100

d (mm)	D (mm)	H (mm)	H1 (mm)	H2 (mm)	H3 (mm)	H5 (mm)	L (mm)	L1 (mm)	L2 (mm)	L4 (mm)	L5 (mm)	L7 (mm)	z (mm)	closest inch (inch)
16	50	231	27	64	94	167	92	180	56	25	97	122	64	⅜
20	50	231	27	64	94	167	95	180	56	25	97	122	64	½
25	58	240	30	73	94	167	110	180	65	25	97	122	72	¾
32	68	240	36	73	94	167	123	180	71	25	97	122	79	1
40	84	251	44	84	94	167	146	180	85	45	97	122	94	1 ¼
50	97	251	51	84	94	167	157	180	89	45	97	122	95	1 ½
63	124	273	64	106	94	167	183	180	101	45	97	122	107	2
75	166	346	85	156	94	190	233	180	136	70	98	122	144	2 ½
90	200	358	105	168	94	190	254	180	141	70	98	122	151	3
110	238	365	123	175	94	190	301	180	164	120	98	122	174	4

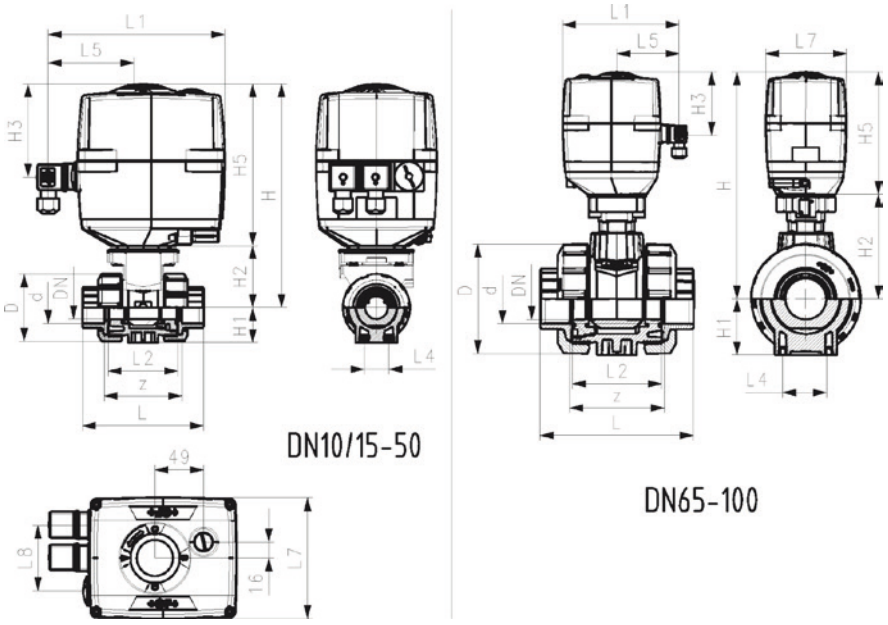

+GF+

Product Configurator

Create your own ball valve

Pneumatic Actuator

P01	PA 11/21 Fail safe to close (FC)
P02	PA 11/21 Fail safe to open (FO)
P03	PA 11/21 Double acting (DA)
P30	PA 30/90 Fail safe to close (FC)
P31	PA 30/90 Fail safe to open (FO)
P32	PA 30/90 Double acting (DA)

Stroke Limiter

---	without Stroke Limiter
R02	With Stroke Limiter

Accessories

S01	Namur Mounting Bracket
S03	Limit Switch Unit with Switches Ag,Ni
S04	Limit Switch Unit with Switches Au
S05	Limit Switch Unit with Inductive Switches Namur Eexi
S06	Limit Switch Unit with Inductive Switches PNP
S07	Limit Switch Unit with Inductive Switches NPN
S08	Limit Switch Unit with Inductive Switches Namur Eexd

P01	S05	=

Ball valves pneumatic type 546 Pro with PPA

PVC-C Ball valve type 546 Pro with PPA
FC (Fail Safe to Close)
With solvent cement sockets PVC-C ISO
With manual override

Model:

- Control pressure supply through integrated NAMUR interface according VDI/VDE 3845
- Full plastic solution (actuator housing made of PP-GF)
- Visual position indicator
- Integrated stainless steel mounting inserts
- z-dimension, valve end and union nut are compatible with type 546 (1st Generation)

Option:

- Position feedback through double sensor with LED (PNP, NPN and NAMUR)
- Positioner RPC, RPC D, RPC PID
- Individual configuration of valves possible

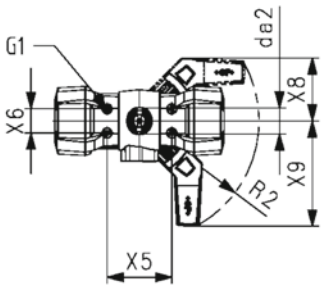

d (mm)	DN (mm)	Size (inch)	PN (bar)	kv-value (Δp=1 bar) (l/min)	EPDM Code	SP	Weight (kg)	FKM Code	SP	Weight (kg)
16	10	⅜	10	70	**199 250 402**	1	1.459	**199 250 412**	1	1.459
20	15	½	10	185	**199 250 403**	1	1.459	**199 250 413**	1	1.459
25	20	¾	10	350	**199 250 404**	1	1.576	**199 250 414**	1	1.576
32	25	1	10	700	**199 250 405**	1	1.700	**199 250 415**	1	1.496
40	32	1 ¼	10	1000	**199 250 406**	1	2.477	**199 250 416**	1	2.751
50	40	1 ½	10	1600	**199 250 407**	1	3.073	**199 250 417**	1	2.736
63	50	2	10	3100	**199 250 408**	1	4.471	**199 250 418**	1	3.530

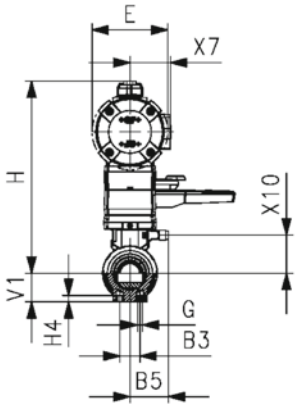

d (mm)	Actuator	B3 (mm)	B5 (mm)	da2 (mm)	DE1 (mm)	E (mm)	G (mm)	G1 (mm)	H (mm)	H2 (mm)	H4 (mm)	L (mm)	Lz (mm)	M (mm)	R2
16	PPA08	25	16.2	33	50	74	M6	M5	215	20	12	92	28	159	R150
20	PPA08	25	16.2	33	50	74	M6	M5	215	20	12	95	28	159	R150
25	PPA08	25	17.5	33	58	74	M6	M5	219	20	12	110	33	159	R150
32	PPA15	25	17.5	33	68	94	M6	M5	238	20	12	123	36	211	R150
40	PPA15	45	23.3	33	84	94	M8	M5	244	20	15	146	43	211	R150
50	PPA40	45	23.3	33	97	120	M8	M5	273	20	15	157	45	246	R150
63	PPA40	45	24.3	33	124	120	M8	M5	288	20	15	183	51	246	R150

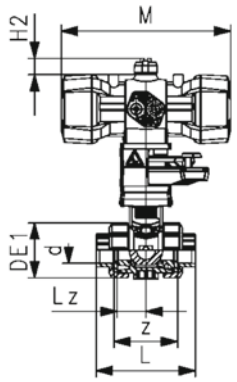

d (mm)	V1 (mm)	X5 (mm)	X6 (mm)	X7 (mm)	X8 (mm)	X9 (mm)	X10 (mm)	z (mm)
16	27	80	30	43	78	132	38.0	64
20	27	80	30	43	78	132	38.0	64
25	30	80	30	43	78	132	41.9	72
32	36	80	30	51	78	132	47.0	79
40	44	80	30	51	78	132	53.5	94
50	51	80	30	62	78	132	62.8	95
63	64	80	30	62	78	132	77.0	107

PVC-C Ball valve type 546 Pro with PPA
FC (Fail Safe to Close)
With threaded sockets PVC-C ISO Rp
With manual override

Model:

- Control pressure supply through integrated NAMUR interface according VDI/VDE 3845
- Full plastic solution (actuator housing made of PP-GF)
- Visual position indicator
- Integrated stainless steel mounting inserts
- z-dimension, valve end and union nut are compatible with type 546 (1st Generation)

Option:

- Position feedback through double sensor with LED (PNP, NPN and NAMUR)
- Positioner RPC, RPC D, RPC PID
- Individual configuration of valves possible

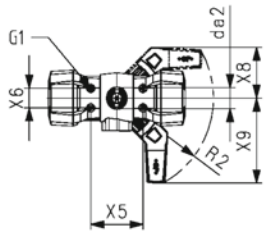

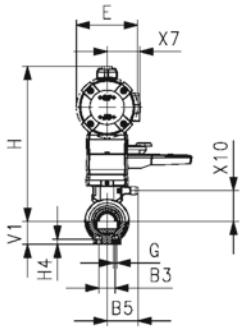

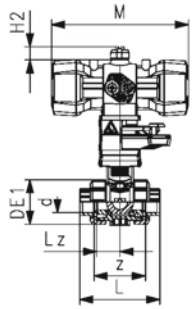

d (mm)	DN (mm)	Size (inch)	PN (bar)	kv-value (Δp=1 bar) (l/min)	EPDM Code	SP	Weight (kg)	FKM Code	SP	Weight (kg)
16	10	⅜	10	70	**199 250 752**	1	1.500	**199 250 772**	1	1.500
20	15	½	10	185	**199 250 753**	1	1.500	**199 250 773**	1	1.500
25	20	¾	10	350	**199 250 754**	1	1.600	**199 250 774**	1	1.600
32	25	1	10	700	**199 250 755**	1	1.700	**199 250 775**	1	1.700
40	32	1 ¼	10	1000	**199 250 756**	1	2.800	**199 250 776**	1	2.800
50	40	1 ½	10	1600	**199 250 757**	1	3.100	**199 250 777**	1	3.100
63	50	2	10	3100	**199 250 758**	1	4.000	**199 250 778**	1	4.000

d (mm)	Actuator	B3 (mm)	B5 (mm)	da2 (mm)	DE1 (mm)	E (mm)	G (mm)	G1 (mm)	H (mm)	H2 (mm)	H4 (mm)	L (mm)	Lz (mm)	M (mm)	R2
16	PPA08	25	16.2	33	50	74	M6	M5	215	20	12	95	28	159	R150
20	PPA08	25	16.2	33	50	74	M6	M5	215	20	12	100	28	159	R150
25	PPA08	25	17.5	33	58	74	M6	M5	219	20	12	114	33	159	R150
32	PPA15	25	17.5	33	68	94	M6	M5	238	20	12	127	36	211	R150
40	PPA15	45	23.3	33	84	94	M8	M5	244	20	12	146	43	211	R150
50	PPA40	45	23.3	33	97	120	M8	M5	273	20	12	152	45	246	R150
63	PPA40	45	23.3	33	124	120	M8	M5	288	20	12	177	51	246	R150

d (mm)	V1 (mm)	X5 (mm)	X6 (mm)	X7 (mm)	X8 (mm)	X9 (mm)	X10 (mm)	z (mm)	Thread Type
16	27	80	30	43	78	132	38.0	69	Rp
20	27	80	30	43	78	132	38.0	67	Rp
25	30	80	30	43	78	132	41.9	78	Rp
32	36	80	30	51	78	132	47.0	85	Rp
40	44	80	30	51	78	132	53.5	100	Rp
50	51	80	30	62	78	132	62.8	106	Rp
63	64	80	30	62	78	132	77.0	121	Rp

PVC-C Ball valve type 546 Pro with PPA
FO (Fail Safe to Open)
With threaded sockets PVC-C ISO Rp
With manual override

Model:

- Control pressure supply through integrated NAMUR interface according VDI/VDE 3845
- Full plastic solution (actuator housing made of PP-GF)
- Visual position indicator
- Integrated stainless steel mounting inserts
- z-dimension, valve end and union nut are compatible with type 546 (1st Generation)

Option:

- Position feedback through double sensor with LED (PNP, NPN and NAMUR)
- Positioner RPC, RPC D, RPC PID
- Individual configuration of valves possible

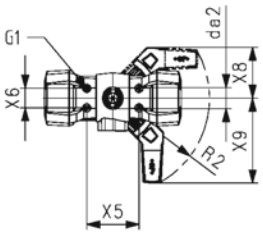

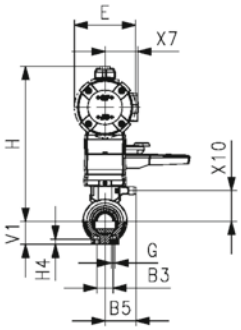

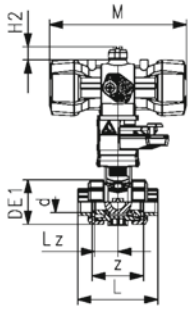

d (mm)	DN (mm)	Size (inch)	PN (bar)	kv-value (Δp=1 bar) (l/min)	EPDM Code	SP	Weight (kg)	FKM Code	SP	Weight (kg)
16	10	⅜	10	70	**199 250 792**	1	1.500	**199 250 812**	1	1.500
20	15	½	10	185	**199 250 793**	1	1.500	**199 250 813**	1	1.500
25	20	¾	10	350	**199 250 794**	1	1.600	**199 250 814**	1	1.600
32	25	1	10	700	**199 250 795**	1	1.700	**199 250 815**	1	1.700
40	32	1 ¼	10	1000	**199 250 796**	1	2.800	**199 250 816**	1	2.800
50	40	1 ½	10	1600	**199 250 797**	1	3.100	**199 250 817**	1	3.100
63	50	2	10	3100	**199 250 798**	1	4.000	**199 250 818**	1	4.000

d (mm)	Actuator	B3 (mm)	B5 (mm)	da2 (mm)	DE1 (mm)	E (mm)	G (mm)	G1 (mm)	H (mm)	H2 (mm)	H4 (mm)	L (mm)	Lz (mm)	M (mm)	R2
16	PPA08	25	16.2	33	50	74	M6	M5	215	20	12	95	28	159	R150
20	PPA08	25	16.2	33	50	74	M6	M5	215	20	12	100	28	159	R150
25	PPA08	25	17.5	33	58	74	M6	M5	219	20	12	114	33	159	R150
32	PPA15	25	17.5	33	68	94	M6	M5	238	20	12	127	36	211	R150
40	PPA15	45	23.3	33	84	94	M8	M5	244	20	15	146	43	211	R150
50	PPA40	45	23.3	33	97	120	M8	M5	273	20	15	152	45	246	R150
63	PPA40	45	24.3	33	124	120	M8	M5	288	20	15	177	51	246	R150

d (mm)	V1 (mm)	X5 (mm)	X6 (mm)	X7 (mm)	X8 (mm)	X9 (mm)	X10 (mm)	z (mm)	Thread Type
16	27	80	30	43	78	132	77.0	69	Rp
20	27	80	30	43	78	132	38.0	67	Rp
25	30	80	30	43	78	132	38.0	78	Rp
32	36	80	30	51	78	132	41.9	85	Rp
40	44	80	30	51	78	132	47.0	100	Rp
50	51	80	30	62	78	132	53.5	106	Rp
63	64	80	30	62	78	132	62.8	121	Rp

PVC-C Ball valve type 546 Pro with PPA
DA (Double Acting)
With threaded sockets PVC-C ISO Rp
With manual override

Model:

- Control pressure supply through integrated NAMUR interface according VDI/VDE 3845
- Full plastic solution (actuator housing made of PP-GF)
- Visual position indicator
- Integrated stainless steel mounting inserts
- z-dimension, valve end and union nut are compatible with type 546 (1st Generation)

Option:

- Position feedback through double sensor with LED (PNP, NPN and NAMUR)
- Positioner RPC, RPC D, RPC PID
- Individual configuration of valves possible

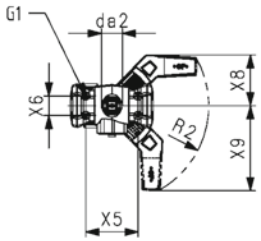

d (mm)	DN (mm)	Size (inch)	PN (bar)	kv-value (Δp=1 bar) (l/min)	EPDM Code	SP	Weight (kg)	FKM Code	SP	Weight (kg)
16	10	⅜	10	70	**199 250 832**	1	1.500	**199 250 852**	1	1.500
20	15	½	10	185	**199 250 833**	1	1.500	**199 250 853**	1	1.500
25	20	¾	10	350	**199 250 834**	1	1.600	**199 250 854**	1	1.600
32	25	1	10	700	**199 250 835**	1	1.700	**199 250 855**	1	1.700
40	32	1 ¼	10	1000	**199 250 836**	1	2.800	**199 250 856**	1	2.800
50	40	1 ½	10	1600	**199 250 837**	1	3.100	**199 250 857**	1	3.100
63	50	2	10	3100	**199 250 838**	1	4.000	**199 250 858**	1	4.000

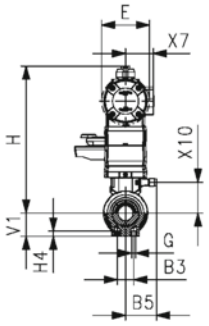

d (mm)	Actuator	B3 (mm)	B5 (mm)	da2 (mm)	DE1 (mm)	E (mm)	G (mm)	G1 (mm)	H (mm)	H2 (mm)	H4 (mm)	L (mm)	Lz (mm)	M (mm)	R2
16	PPA08	25	16.2	33	50	74	M6	M5	215	20	12	95	28	128	R150
20	PPA08	25	16.2	33	50	74	M6	M5	215	20	12	100	28	128	R150
25	PPA08	25	17.5	33	58	74	M6	M5	219	20	12	114	33	128	R150
32	PPA08	25	17.5	33	68	94	M6	M5	238	20	12	127	36	128	R150
40	PPA15	45	23.3	33	84	94	M8	M5	244	20	15	146	43	159	R150
50	PPA15	45	23.3	33	97	120	M8	M5	273	20	15	152	45	159	R150
63	PPA40	45	24.3	33	124	120	M8	M5	288	20	15	177	51	184	R150

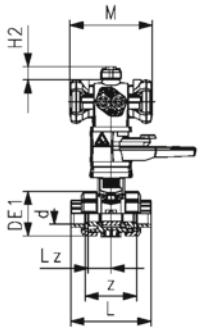

d (mm)	V1 (mm)	X5 (mm)	X6 (mm)	X7 (mm)	X8 (mm)	X9 (mm)	X10 (mm)	z (mm)	Thread Type
16	27	80	30	43	78	132	38.0	69	Rp
20	27	80	30	43	78	132	38.0	67	Rp
25	30	80	30	43	78	132	41.9	78	Rp
32	36	80	30	51	78	132	47.0	85	Rp
40	44	80	30	51	78	132	53.5	100	Rp
50	51	80	30	62	78	132	62.8	106	Rp
63	64	80	30	62	78	132	77.0	121	Rp

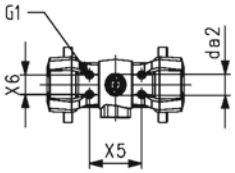

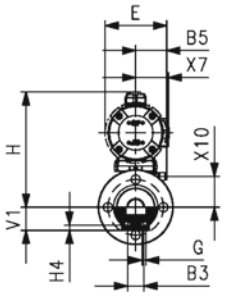

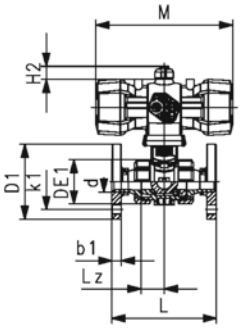

PVC-C Ball valve type 546 Pro with PPA
FC (Fail safe to close)
With backing flanges PVC-C ISO
Without manual override
5.6 bar control pressure

Model:

- Control pressure supply through integrated NAMUR interface according VDI/VDE 3845
- Full plastic solution (actuator housing made of PP-GF)
- Visual position indicator
- Integrated stainless steel mounting inserts
- z-dimension, valve end and union nut are compatible with type 546 (1st Generation)

Option:

- Positioner RPC, RPC D, RPC PID
- Position feedback through double sensor with LED (PNP, NPN and NAMUR)
- Individual configuration of valves possible

d (mm)	DN (mm)	PN (bar)	kv-value (Δp=1 bar) (l/min)	EPDM Code	SP	Weight (kg)	FKM Code	SP	Weight (kg)
75	65	10	5000	**199 254 609**	1	12.300	**199 254 619**	1	12.300
90	80	10	7000	**199 254 610**	1	15.800	**199 254 620**	1	13.840
110	100	10	11000	**199 254 611**	1	23.200	**199 254 621**	1	23.200

Actuator	b1 (mm)	B3 (mm)	B5 (mm)	D1 (mm)	da2 (mm)	DE1 (mm)	E (mm)	G (mm)	G1 (mm)	H (mm)	H2 (mm)	H4 (mm)	k1 (mm)	L (mm)
PPA80	18	70	28.5	166	33	166	142	M8	M5	277	20	15	145	290
PPA80	20	70	28.5	200	33	200	142	M8	M5	289	20	15	160	310
PPA80	20	120	28.5	350	33	238	142	M12	M5	324	20	22	180	350

Lz (mm)	M (mm)	V1 (mm)	X5 (mm)	X6 (mm)	X7 (mm)	X10 (mm)
68	343	85	80	30	74	119
71	343	105	80	30	74	131
82	343	123	80	30	74	145

PVC-C Ball valve type 546 Pro with PPA
FO (Fail safe to open)
With backing flanges PVC-C ISO
Without manual override
5.6 bar control pressure

Model:

- Control pressure supply through integrated NAMUR interface according VDI/VDE 3845
- Full plastic solution (actuator housing made of PP-GF)
- Visual position indicator
- Integrated stainless steel mounting inserts
- z-dimension, valve end and union nut are compatible with type 546 (1st Generation)

Option:

- Position feedback through double sensor with LED (PNP, NPN and NAMUR)
- Positioner RPC, RPC D, RPC PID
- Individual configuration of valves possible

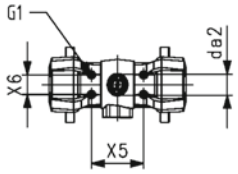

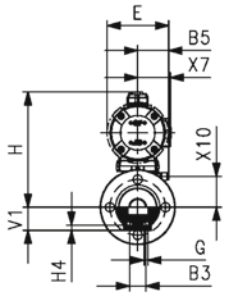

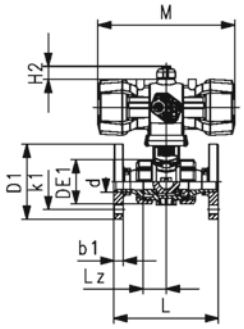

d (mm)	DN (mm)	PN (bar)	kv-value (Δp=1 bar) (l/min)	EPDM Code	SP	Weight (kg)	FKM Code	SP	Weight (kg)
75	65	10	5000	**199 254 629**	1	12.300	**199 254 639**	1	12.300
90	80	10	7000	**199 254 630**	1	15.800	**199 254 640**	1	15.800
110	100	10	11000	**199 254 631**	1	23.200	**199 254 641**	1	23.200

Actuator	b1 (mm)	B3 (mm)	B5 (mm)	D1 (mm)	da2 (mm)	DE1 (mm)	E (mm)	G (mm)	G1 (mm)	H (mm)	H2 (mm)	H4 (mm)	k1 (mm)	L (mm)
PPA80	18	70	28.5	166	33	166	142	M8	M5	277	20	15	145	290
PPA80	20	70	28.5	200	33	200	142	M8	M5	289	20	15	160	310
PPA80	20	120	28.5	238	33	238	142	M12	M5	324	20	22	180	350

Lz (mm)	M (mm)	V1 (mm)	X5 (mm)	X6 (mm)	X7 (mm)	X10 (mm)
68	343	85	80	30	74	119
184	343	105	80	30	74	131
261	343	123	80	30	74	145

PVC-C Ball valve type 546 Pro with PPA
DA (Double Acting)
With backing flanges PVC-C ISO
Without manual override
4.2 bar control pressure

Model:

- Control pressure supply through integrated NAMUR interface according VDI/VDE 3845
- Full plastic solution (actuator housing made of PP-GF)
- Visual position indicator
- Integrated stainless steel mounting inserts
- z-dimension, valve end and union nut are compatible with type 546 (1st Generation)

Option:

- Position feedback through double sensor with LED (PNP, NPN and NAMUR)
- Positioner RPC, RPC D, RPC PID
- Individual configuration of valves possible

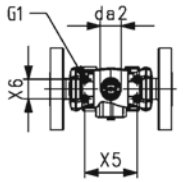

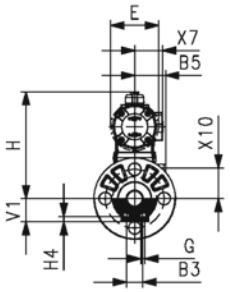

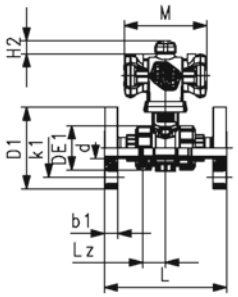

d (mm)	PN (bar)	DN (mm)	kv-value (Δp=1 bar) (l/min)	EPDM Code	SP	Weight (kg)	FKM Code	SP	Weight (kg)
75	10	65	5000	**199 254 649**	1	11.100	**199 254 659**	1	11.100
90	10	80	7000	**199 254 650**	1	15.100	**199 254 660**	1	15.100
110	10	100	11000	**199 254 651**	1	21.500	**199 254 661**	1	21.500

d (mm)	Actuator	b1 (mm)	B3 (mm)	B5 (mm)	D1 (mm)	da2 (mm)	DE1 (mm)	E (mm)	G (mm)	G1 (mm)	H (mm)	H2 (mm)	H4 (mm)	k1 (mm)	L (mm)
75	PPA40	18	70	28.5	166	33	166	142	M8	M5	277	20	15	145	290
90	PPA40	20	70	28.5	200	33	200	142	M8	M5	289	20	15	152	310
110	PPA80	20	120	28.5	238	33	238	142	M12	M5	324	20	22	190	350

d (mm)	Lz (mm)	M (mm)	V1 (mm)	X5 (mm)	X6 (mm)	X7 (mm)	X10 (mm)
75	68	184	85	80	30	74	119
90	71	184	105	80	30	74	131
110	82	261	123	80	30	74	145

PVC-C Ball valve type 546 Pro with PPA
DA (Double Acting)
With threaded sockets PVC-C ISO Rp
Without manual override
5.6 bar control pressure

Model:

- Control pressure supply through integrated NAMUR interface according VDI/VDE 3845
- Full plastic solution (actuator housing made of PP-GF)
- Visual position indicator
- Integrated stainless steel mounting inserts
- z-dimension, valve end and union nut are compatible with type 546 (1st Generation)

Option:

- Position feedback through double sensor with LED (PNP, NPN and NAMUR)
- Positioner RPC, RPC D, RPC PID
- Individual configuration of valves possible

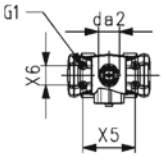

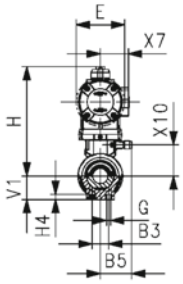

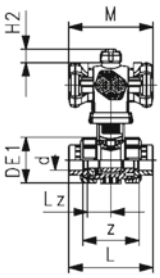

d (mm)	DN (mm)	Size (inch)	PN (bar)	kv-value (Δp=1 bar) (l/min)	EPDM Code	SP	Weight (kg)	FKM Code	SP	Weight (kg)
16	10	⅜	10	70	**199 250 942**	1	1.200	**199 250 952**	1	1.200
20	15	½	10	185	**199 250 943**	1	1.200	**199 250 953**	1	1.200
25	20	¾	10	350	**199 250 944**	1	1.300	**199 250 954**	1	1.300
32	25	1	10	700	**199 250 945**	1	1.400	**199 250 955**	1	1.400
40	32	1 ¼	10	1000	**199 250 946**	1	2.500	**199 250 956**	1	2.500
50	40	1 ½	10	1600	**199 250 947**	1	2.800	**199 250 957**	1	2.800
63	50	2	10	3100	**199 250 948**	1	3.700	**199 250 958**	1	3.700
75	65	2 ½	10	5000	**199 250 949**	1	7.100	**199 250 959**	1	7.100
90	80	3	10	7000	**199 250 950**	1	10.300	**199 250 960**	1	10.300
110	100	4	10	11000	**199 250 951**	1	14.800	**199 250 961**	1	14.800

d (mm)	Actuator	B3 (mm)	B5 (mm)	da2 (mm)	DE1 (mm)	E (mm)	G (mm)	G1 (mm)	H (mm)	H2 (mm)	H4 (mm)	L (mm)	Lz (mm)	M (mm)	V1 (mm)
16	PPA08	25	16.2	33	50	74	M6	M5	155	20	12	95	28	128	27
20	PPA08	25	16.2	33	50	74	M6	M5	155	20	12	100	28	128	27
25	PPA08	25	17.5	33	58	74	M6	M5	159	20	12	114	33	128	30
32	PPA08	25	17.5	33	68	94	M6	M5	178	20	12	127	36	128	36
40	PPA15	45	23.3	33	84	94	M8	M5	184	20	15	146	43	159	44
50	PPA15	45	23.3	33	97	120	M8	M5	213	20	15	152	45	159	51
63	PPA40	45	24.3	33	124	120	M8	M5	228	20	15	177	51	184	64
75	PPA40	70	28.5	33	166	142	M8	M5	277	20	15	233	68	184	85
90	PPA40	70	28.5	33	200	142	M8	M5	289	20	15	254	71	184	105
110	PPA80	120	28.5	33	238	142	M12	M5	324	20	22	301	82	261	123

d (mm)	X5 (mm)	X6 (mm)	X7 (mm)	X10 (mm)	z (mm)	Thread Type
16	80	30	43	38.0	69	Rp
20	80	30	43	38.0	67	Rp
25	80	30	43	41.9	78	Rp
32	80	30	51	47.0	85	Rp
40	80	30	51	53.5	100	Rp
50	80	30	62	62.8	106	Rp
63	80	30	62	77.0	121	Rp
75	80	30	74	119.0	144	Rp
90	80	30	74	131.0	151	Rp
110	80	30	74	145.0	174	Rp

PVC-C Ball valve type 546 Pro with PPA
DA (Double Acting)
With solvent cement sockets PVC-C ISO
Without manual override
5.6 bar control pressure

Model:

- Control pressure supply through integrated NAMUR interface according VDI/VDE 3845
- Full plastic solution (actuator housing made of PP-GF)
- Visual position indicator
- Integrated stainless steel mounting inserts
- z-dimension, valve end and union nut are compatible with type 546 (1st Generation)

Option:

- Position feedback through double sensor with LED (PNP, NPN and NAMUR)
- Positioner RPC, RPC D, RPC PID
- Individual configuration of valves possible

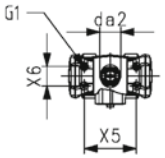

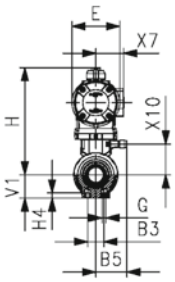

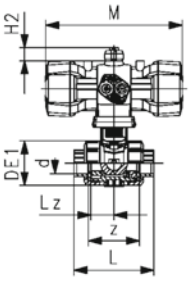

d (mm)	DN (mm)	Size (inch)	PN (bar)	kv-value (Δp=1 bar) (l/min)	EPDM Code	SP	Weight (kg)	FKM Code	SP	Weight (kg)
16	10	⅜	10	70	**199 250 602**	1	1.159	**199 250 612**	1	1.159
20	15	½	10	185	**199 250 603**	1	1.159	**199 250 613**	1	1.159
25	20	¾	10	350	**199 250 604**	1	1.276	**199 250 614**	1	1.276
32	25	1	10	700	**199 250 605**	1	1.400	**199 250 615**	1	1.400
40	32	1 ¼	10	1000	**199 250 606**	1	2.451	**199 250 616**	1	1.738
50	40	1 ½	10	1600	**199 250 607**	1	2.773	**199 250 617**	1	1.991
63	50	2	10	3100	**199 250 608**	1	3.631	**199 250 618**	1	3.631
75	65	2 ½	10	5000	**199 250 609**	1	7.000	**199 250 619**	1	7.000
90	80	3	10	7000	**199 250 610**	1	10.200	**199 250 620**	1	10.200
110	100	4	10	11000	**199 250 611**	1	14.700	**199 250 621**	1	14.700

d (mm)	Actuator	B3 (mm)	B5 (mm)	da2 (mm)	DE1 (mm)	E (mm)	G (mm)	G1 (mm)	H (mm)	H2 (mm)	H4 (mm)	L (mm)	Lz (mm)	M (mm)	V1 (mm)
16	PPA08	25	16.2	33	50	74	M6	M5	155	20	12	92	28	128	27
20	PPA08	25	16.2	33	50	74	M6	M5	155	20	12	95	28	128	27
25	PPA08	25	17.5	33	58	74	M6	M5	159	20	12	110	33	128	30
32	PPA08	25	17.5	33	68	94	M8	M5	178	20	12	123	36	128	36
40	PPA15	45	23.3	33	84	94	M8	M5	184	20	15	146	43	159	44
50	PPA15	45	23.3	33	97	120	M8	M5	213	20	15	157	45	159	51
63	PPA40	45	24.3	33	124	120	M8	M5	228	20	15	183	51	184	64
75	PPA40	70	28.5	33	166	142	M8	M5	277	20	15	233	68	184	85
90	PPA40	70	28.5	33	200	142	M8	M5	289	20	15	254	71	184	105
110	PPA80	120	28.5	33	238	142	M12	M5	324	20	22	301	82	261	123

d (mm)	X5 (mm)	X6 (mm)	X7 (mm)	X10 (mm)	z (mm)
16	80	30	43	38.0	64
20	80	30	43	38.0	64
25	80	30	43	41.9	72
32	80	30	51	47.0	79
40	80	30	51	53.5	94
50	80	30	62	62.8	95
63	80	30	62	77.0	107
75	80	30	74	119.0	144
90	80	30	74	131.0	151
110	80	30	74	145.0	174

PVC-C Ball valve type 546 Pro with PPA
FO (Fail safe to open)
With threaded sockets PVC-C ISO Rp
Without manual override
5.6 bar control pressure

Model:

- Control pressure supply through integrated NAMUR interface according VDI/VDE 3845
- Full plastic solution (actuator housing made of PP-GF)
- Visual position indicator
- Integrated stainless steel mounting inserts
- z-dimension, valve end and union nut are compatible with type 546 (1st Generation)

Option:

- Position feedback through double sensor with LED (PNP, NPN and NAMUR)
- Positioner RPC, RPC D, RPC PID
- Individual configuration of valves possible

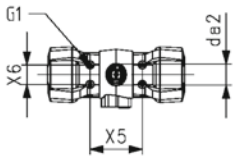

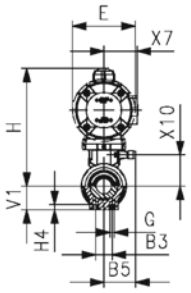

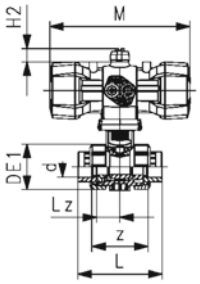

d (mm)	DN (mm)	Size (inch)	PN (bar)	kv-value (Δp=1 bar) (l/min)	EPDM Code	SP	Weight (kg)	FKM Code	SP	Weight (kg)
16	10	⅜	10	70	**199 250 912**	1	1.200	**199 250 932**	1	1.200
20	15	½	10	185	**199 250 913**	1	1.200	**199 250 933**	1	1.200
25	20	¾	10	350	**199 250 914**	1	1.300	**199 250 934**	1	1.300
32	25	1	10	700	**199 250 915**	1	1.400	**199 250 935**	1	1.400
40	32	1 ¼	10	1000	**199 250 916**	1	2.500	**199 250 936**	1	2.500
50	40	1 ½	10	1600	**199 250 917**	1	2.800	**199 250 937**	1	2.800
63	50	2	10	3100	**199 250 918**	1	3.700	**199 250 938**	1	3.700
75	65	2 ½	10	5000	**199 250 919**	1	8.200	**199 250 939**	1	8.200
90	80	3	10	7000	**199 250 920**	1	11.000	**199 250 940**	1	11.000
110	100	4	10	11000	**199 250 921**	1	16.500	**199 250 941**	1	16.500

d (mm)	Actuator	B3 (mm)	B5 (mm)	da2 (mm)	DE1 (mm)	E (mm)	G (mm)	G1 (mm)	H (mm)	H2 (mm)	H4 (mm)	L (mm)	Lz (mm)	M (mm)	V1 (mm)
16	PPA08	25	16.2	33	50	74	M6	M5	155	20	12	95	28	159	27
20	PPA08	25	16.2	33	50	74	M6	M5	155	20	12	100	28	159	27
25	PPA08	25	17.5	33	58	74	M6	M5	159	20	12	114	33	159	30
32	PPA15	25	17.5	33	68	94	M6	M5	178	20	12	127	36	211	36
40	PPA15	45	23.3	33	84	94	M8	M5	184	20	15	146	43	211	44
50	PPA40	45	23.3	33	97	120	M8	M5	213	20	15	152	45	246	51
63	PPA40	45	24.3	33	124	120	M8	M5	228	20	15	177	51	246	64
75	PPA80	70	28.5	33	166	142	M8	M5	277	20	15	233	68	343	85
90	PPA80	70	28.5	33	200	142	M8	M5	289	20	15	254	71	343	105
110	PPA80	120	28.5	33	238	142	M12	M5	324	20	22	301	82	343	123

d (mm)	X5 (mm)	X6 (mm)	X7 (mm)	X10 (mm)	z (mm)	Thread Type
16	80	30	43	38.0	69	Rp
20	80	30	43	38.0	67	Rp
25	80	30	43	41.9	78	Rp
32	80	30	51	47.0	85	Rp
40	80	30	51	53.5	100	Rp
50	80	30	62	62.8	106	Rp
63	80	30	62	77.0	121	Rp
75	80	30	74	119.0	144	Rp
90	80	30	74	131.0	151	Rp
110	80	30	74	145.0	174	Rp

PVC-C Ball valve type 546 Pro with PPA
FO (Fail safe to open)
With solvent cement spigots PVC-C ISO
Without manual override
5.6 bar control pressure

Model:

- Control pressure supply through integrated NAMUR interface according VDI/VDE 3845
- Full plastic solution (actuator housing made of PP-GF)
- Visual position indicator
- Integrated stainless steel mounting inserts
- z-dimension, valve end and union nut are compatible with type 546 (1st Generation)

Option:

- Position feedback through double sensor with LED (PNP, NPN and NAMUR)
- Positioner RPC, RPC D, RPC PID
- Individual configuration of valves possible

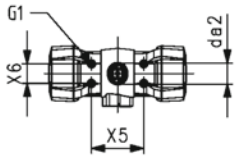

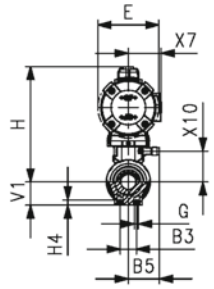

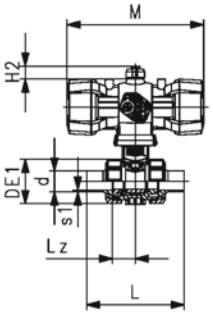

d (mm)	DN (mm)	Size (inch)	PN (bar)	kv-value (Δp=1 bar) (l/min)	EPDM Code	SP	Weight (kg)	FKM Code	SP	Weight (kg)
16	10	⅜	10	70	**199 250 582**	1	1.159	**199 250 592**	1	1.159
20	15	½	10	185	**199 250 583**	1	1.159	**199 250 593**	1	1.159
25	20	¾	10	350	**199 250 584**	1	1.276	**199 250 594**	1	1.276
32	25	1	10	700	**199 250 585**	1	1.400	**199 250 595**	1	1.400
40	32	1 ¼	10	1000	**199 250 586**	1	2.451	**199 250 596**	1	2.451
50	40	1 ½	10	1600	**199 250 587**	1	2.773	**199 250 597**	1	2.773
63	50	2	10	3100	**199 250 588**	1	3.631	**199 250 598**	1	3.631
75	65	2 ½	10	5000	**199 250 589**	1	8.300	**199 250 599**	1	8.300
90	80	3	10	7000	**199 250 590**	1	11.000	**199 250 600**	1	11.000
110	100	4	10	11000	**199 250 591**	1	16.700	**199 250 601**	1	16.700

d (mm)	Actuator	B3 (mm)	B5 (mm)	da2 (mm)	DE1 (mm)	E (mm)	G (mm)	G1 (mm)	H (mm)	H2 (mm)	H4 (mm)	L (mm)	Lz (mm)	M (mm)	s1 (mm)
16	PPA08	25	16.2	33	50	74	M6	M5	155	20	12	114	28	159	3.0
20	PPA08	25	16.2	33	50	74	M6	M5	155	20	12	124	28	159	3.0
25	PPA08	25	17.5	33	58	74	M6	M5	159	20	12	144	33	159	3.0
32	PPA15	25	17.5	33	68	94	M8	M5	178	20	12	154	36	211	4.0
40	PPA15	45	23.3	33	84	94	M8	M5	184	20	15	174	43	211	4.5
50	PPA40	45	23.3	33	97	120	M8	M5	213	20	15	194	45	246	5.5
63	PPA40	45	24.3	33	124	120	M8	M5	228	20	15	224	51	246	7.0
75	PPA80	70	28.5	33	166	142	M8	M5	277	20	15	284	68	343	8.5
90	PPA80	70	28.5	33	200	142	M8	M5	289	20	15	300	71	343	10.0
110	PPA80	120	28.5	33	238	142	M12	M5	324	20	22	340	82	343	12.0

d (mm)	V1 (mm)	X5 (mm)	X6 (mm)	X7 (mm)	X10 (mm)	z (mm)
16	27	80	30	43	38.0	88
20	27	80	30	43	38.0	96
25	30	80	30	43	41.9	112
32	36	80	30	51	47.0	118
40	44	80	30	51	53.5	134
50	51	80	30	62	62.8	148
63	64	80	30	62	77.0	170
75	85	80	30	74	119.0	194
90	105	80	30	74	131.0	196
110	123	80	30	74	145.0	212

PVC-C Ball valve type 546 Pro with PPA
FO (Fail safe to open)
With solvent cement sockets PVC-C ISO
Without manual override
5.6 bar control pressure

Model:

- Control pressure supply through integrated NAMUR interface according VDI/VDE 3845
- Full plastic solution (actuator housing made of PP-GF)
- Visual position indicator
- Integrated stainless steel mounting inserts
- z-dimension, valve end and union nut are compatible with type 546 (1st Generation)

Option:

- Position feedback through double sensor with LED (PNP, NPN and NAMUR)
- Positioner RPC, RPC D, RPC PID
- Individual configuration of valves possible

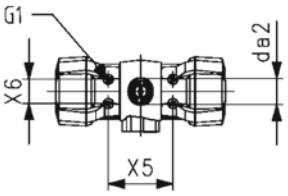

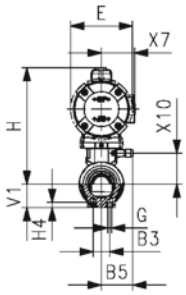

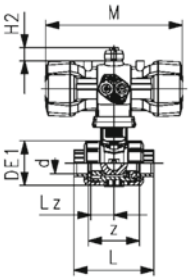

d (mm)	DN (mm)	Size (inch)	PN (bar)	kv-value (Δp=1 bar) (l/min)	EPDM Code	SP	Weight (kg)	FKM Code	SP	Weight (kg)
16	10	⅜	10	70	**199 250 562**	1	1.159	**199 250 572**	1	1.159
20	15	½	10	185	**199 250 563**	1	1.159	**199 250 573**	1	1.159
25	20	¾	10	350	**199 250 564**	1	1.276	**199 250 574**	1	1.276
32	25	1	10	700	**199 250 565**	1	1.400	**199 250 575**	1	1.400
40	32	1 ¼	10	1000	**199 250 566**	1	2.451	**199 250 576**	1	2.451
50	40	1 ½	10	1600	**199 250 567**	1	2.773	**199 250 577**	1	2.773
63	50	2	10	3100	**199 250 568**	1	3.631	**199 250 578**	1	3.631
75	65	2 ½	10	5000	**199 250 569**	1	8.100	**199 250 579**	1	8.100
90	80	3	10	7000	**199 250 570**	1	10.800	**199 250 580**	1	10.800
110	100	4	10	11000	**199 250 571**	1	16.500	**199 250 581**	1	16.500

d (mm)	Actuator	B3 (mm)	B5 (mm)	da2 (mm)	DE1 (mm)	E (mm)	G (mm)	G1 (mm)	H (mm)	H2 (mm)	H4 (mm)	L (mm)	Lz (mm)	M (mm)	V1 (mm)
16	PPA08	25	16.2	33	50	74	M6	M5	155	20	12	92	28	159	27
20	PPA08	25	16.2	33	50	74	M6	M5	155	20	12	95	28	159	27
25	PPA08	25	17.5	33	58	74	M6	M5	159	20	12	110	33	159	30
32	PPA15	25	17.5	33	68	94	M8	M5	178	20	12	123	36	211	36
40	PPA15	45	23.3	33	84	94	M8	M5	184	20	15	146	43	211	44
50	PPA40	45	23.3	33	97	120	M8	M5	213	20	15	157	45	246	51
63	PPA40	45	24.3	33	124	120	M8	M5	228	20	15	183	51	246	64
75	PPA80	70	28.5	33	166	142	M8	M5	277	20	15	233	68	343	85
90	PPA80	70	28.5	33	200	142	M8	M5	289	20	15	254	71	343	105
110	PPA80	120	28.5	33	238	142	M12	M5	324	20	22	301	82	343	123

d (mm)	X5 (mm)	X6 (mm)	X7 (mm)	X10 (mm)	z (mm)
16	80	30	43	38.0	64
20	80	30	43	38.0	64
25	80	30	43	41.9	72
32	80	30	51	47.0	79
40	80	30	51	53.5	94
50	80	30	62	62.8	95
63	80	30	62	77.0	107
75	80	30	74	119.0	144
90	80	30	74	131.0	151
110	80	30	74	145.0	174

PVC-C Ball valve type 546 Pro with PPA
FC (Fail safe to close)
With threaded sockets PVC-C ISO Rp
Without manual override
5.6 bar control pressure

Model:

- Control pressure supply through integrated NAMUR interface according VDI/VDE 3845
- Full plastic solution (actuator housing made of PP-GF)
- Visual position indicator
- Integrated stainless steel mounting inserts
- z-dimension, valve end and union nut are compatible with type 546 (1st Generation)

Option:

- Position feedback through double sensor with LED (PNP, NPN and NAMUR)
- Positioner RPC, RPC D, RPC PID
- Individual configuration of valves possible

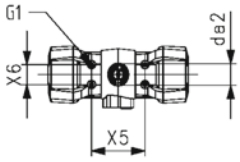

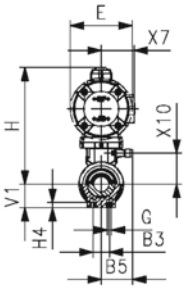

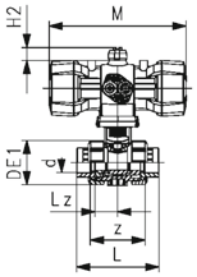

d (mm)	DN (mm)	Size (inch)	PN (bar)	kv-value (Δp=1 bar) (l/min)	EPDM Code	SP	Weight (kg)	FKM Code	SP	Weight (kg)
16	10	⅜	10	70	**199 250 872**	1	1.200	**199 250 892**	1	1.200
20	15	½	10	185	**199 250 873**	1	1.200	**199 250 893**	1	1.200
25	20	¾	10	350	**199 250 874**	1	1.300	**199 250 894**	1	1.300
32	25	1	10	700	**199 250 875**	1	1.400	**199 250 895**	1	1.400
40	32	1 ¼	10	1000	**199 250 876**	1	2.500	**199 250 896**	1	2.500
50	40	1 ½	10	1600	**199 250 877**	1	2.800	**199 250 897**	1	2.800
63	50	2	10	3100	**199 250 878**	1	3.700	**199 250 898**	1	3.700
75	65	2 ½	10	5000	**199 250 879**	1	8.200	**199 250 899**	1	8.200
90	80	3	10	7000	**199 250 880**	1	11.000	**199 250 900**	1	11.000
110	100	4	10	11000	**199 250 881**	1	16.500	**199 250 901**	1	16.500

d (mm)	Actuator	B3 (mm)	B5 (mm)	da2 (mm)	DE1 (mm)	E (mm)	G (mm)	G1 (mm)	H (mm)	H2 (mm)	H4 (mm)	L (mm)	Lz (mm)	M (mm)	V1 (mm)
16	PPA08	25	16.2	33	50	74	M6	M5	155	20	12	95	28	159	27
20	PPA08	25	16.2	33	50	74	M6	M5	155	20	12	100	28	159	27
25	PPA08	25	17.5	33	58	74	M6	M5	159	20	12	114	33	159	30
32	PPA15	25	17.5	33	68	94	M6	M5	178	20	12	127	36	211	36
40	PPA15	45	23.3	33	84	94	M8	M5	184	20	15	146	43	211	44
50	PPA40	45	23.3	33	97	120	M8	M5	213	20	15	152	45	246	51
63	PPA40	45	24.3	33	124	120	M8	M5	228	20	15	177	51	246	64
75	PPA80	70	28.5	33	166	142	M8	M5	277	20	15	233	68	343	85
90	PPA80	70	28.5	33	200	142	M8	M5	289	20	15	254	71	343	105
110	PPA80	120	28.5	33	238	142	M12	M5	324	20	22	301	82	343	123

d (mm)	X5 (mm)	X6 (mm)	X7 (mm)	X10 (mm)	z (mm)	Thread Type
16	80	30	43	38.0	69	Rp
20	80	30	43	38.0	67	Rp
25	80	30	43	41.9	78	Rp
32	80	30	51	47.0	85	Rp
40	80	30	51	53.5	100	Rp
50	80	30	62	62.8	106	Rp
63	80	30	62	77.0	121	Rp
75	80	30	74	119.0	144	Rp
90	80	30	74	131.0	151	Rp
110	80	30	74	145.0	174	Rp

PVC-C Ball valve type 546 Pro with PPA
FC (Fail safe to close)
With solvent cement spigots PVC-C ISO
Without manual override
5.6 bar control pressure

Model:

- Control pressure supply through integrated NAMUR interface according VDI/VDE 3845
- Full plastic solution (actuator housing made of PP-GF)
- Visual position indicator
- Integrated stainless steel mounting inserts
- z-dimension, valve end and union nut are compatible with type 546 (1st Generation)

Option:

- Position feedback sensor, incl. LED feedback (DN10-50) - PNP, NPN and NAMUR
- Positioner RPC, RPC D, RPC PID
- Individual configuration of valves possible

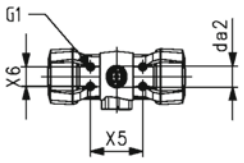

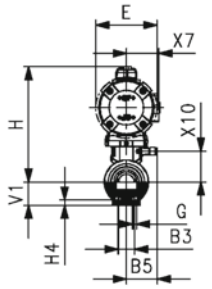

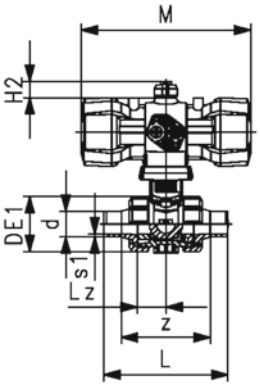

d (mm)	DN (mm)	Size (inch)	PN (bar)	kv-value (Δp=1 bar) (l/min)	EPDM Code	SP	Weight (kg)	FKM Code	SP	Weight (kg)
16	10	⅜	10	70	**199 250 542**	1	1.159	**199 250 552**	1	1.159
20	15	½	10	185	**199 250 543**	1	1.159	**199 250 553**	1	1.159
25	20	¾	10	350	**199 250 544**	1	1.276	**199 250 554**	1	1.276
32	25	1	10	700	**199 250 545**	1	1.400	**199 250 555**	1	1.400
40	32	1 ¼	10	1000	**199 250 546**	1	2.451	**199 250 556**	1	2.451
50	40	1 ½	10	1600	**199 250 547**	1	2.773	**199 250 557**	1	2.773
63	50	2	10	3100	**199 250 548**	1	3.314	**199 250 558**	1	3.631
75	65	2 ½	10	5000	**199 250 549**	1	8.300	**199 250 559**	1	8.300
90	80	3	10	7000	**199 250 550**	1	11.000	**199 250 560**	1	11.000
110	100	4	10	11000	**199 250 551**	1	16.700	**199 250 561**	1	16.700

d (mm)	Actuator	B3 (mm)	B5 (mm)	da2 (mm)	DE1 (mm)	E (mm)	G (mm)	G1 (mm)	H (mm)	H2 (mm)	H4 (mm)	L (mm)	Lz (mm)	M (mm)	s1 (mm)
16	PPA08	25	16.2	33	50	74	M6	M5	155	20	12	114	28	159	3.0
20	PPA08	25	16.2	33	50	74	M6	M5	155	20	12	124	28	159	3.0
25	PPA08	25	17.5	33	58	74	M6	M5	159	20	12	144	33	159	3.0
32	PPA15	25	17.5	33	68	94	M8	M5	178	20	12	154	36	211	4.0
40	PPA15	45	23.3	33	84	94	M8	M5	184	20	15	174	43	211	4.5
50	PPA40	45	23.3	33	97	120	M8	M5	213	20	15	194	45	246	5.5
63	PPA40	45	24.3	33	124	120	M8	M5	228	20	15	224	51	246	7.0
75	PPA80	70	28.5	33	166	142	M8	M5	277	20	15	284	68	343	8.5
90	PPA80	70	28.5	33	200	142	M8	M5	289	20	15	300	71	343	10.0
110	PPA80	120	28.5	33	238	142	M12	M5	324	20	22	340	82	343	12.0

d (mm)	V1 (mm)	X5 (mm)	X6 (mm)	X7 (mm)	X10 (mm)	z (mm)
16	27	80	30	43	38.0	88
20	27	80	30	43	38.0	96
25	30	80	30	43	41.9	112
32	36	80	30	51	47.0	118
40	44	80	30	51	53.5	134
50	51	80	30	62	62.8	148
63	64	80	30	62	77.0	170
75	85	80	30	74	119.0	194
90	105	80	30	74	131.0	196
110	123	80	30	74	145.0	212

PVC-C Ball valve type 546 Pro with PPA
FC (Fail safe to close)
With solvent cement sockets PVC-C ISO
Without manual override
5.6 bar control pressure

Model:

- Control pressure supply through integrated NAMUR interface according VDI/VDE 3845
- Full plastic solution (actuator housing made of PP-GF)
- Visual position indicator
- Integrated stainless steel mounting inserts
- z-dimension, valve end and union nut are compatible with type 546 (1st Generation)

Option:

- Position feedback through double sensor with LED (PNP, NPN and NAMUR)
- Positioner RPC, RPC D, RPC PID
- Individual configuration of valves possible

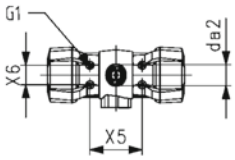

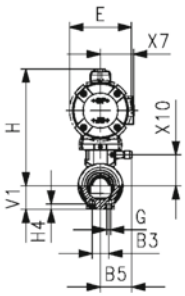

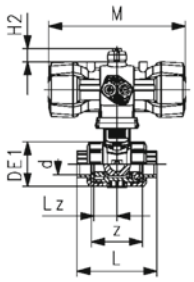

d (mm)	DN (mm)	Size (inch)	PN (bar)	kv-value (Δp=1 bar) (l/min)	EPDM Code	SP	Weight (kg)	FKM Code	SP	Weight (kg)
16	10	⅜	10	70	**199 250 522**	1	1.159	**199 250 532**	1	1.159
20	15	½	10	185	**199 250 523**	1	1.553	**199 250 533**	1	1.159
25	20	¾	10	350	**199 250 524**	1	1.276	**199 250 534**	1	1.276
32	25	1	10	700	**199 250 525**	1	1.400	**199 250 535**	1	1.262
40	32	1 ¼	10	1000	**199 250 526**	1	2.451	**199 250 536**	1	2.226
50	40	1 ½	10	1600	**199 250 527**	1	2.773	**199 250 537**	1	2.773
63	50	2	10	3100	**199 250 528**	1	3.250	**199 250 538**	1	3.631
75	65	2 ½	10	5000	**199 250 529**	1	8.100	**199 250 539**	1	8.100
90	80	3	10	7000	**199 250 530**	1	10.800	**199 250 540**	1	10.800
110	100	4	10	11000	**199 250 531**	1	16.500	**199 250 541**	1	16.500

d (mm)	Actuator	B3 (mm)	B5 (mm)	da2 (mm)	DE1 (mm)	E (mm)	G (mm)	G1 (mm)	H (mm)	H2 (mm)	H4 (mm)	L (mm)	Lz (mm)	M (mm)	V1 (mm)
16	PPA08	25	16.2	33	50	74	M6	M5	155	2	12	92	28	159	27
20	PPA08	25	16.2	33	50	74	M6	M5	155	20	12	95	28	159	27
25	PPA08	25	17.5	33	58	74	M6	M5	159	20	12	110	33	159	30
32	PPA15	25	17.5	33	68	94	M8	M5	178	20	12	123	36	211	36
40	PPA15	45	23.3	33	84	94	M8	M5	184	20	15	146	43	211	44
50	PPA40	45	23.3	33	97	120	M8	M5	213	20	15	157	45	246	51
63	PPA40	45	24.3	33	124	120	M8	M5	228	20	15	183	51	246	64
75	PPA80	70	28.5	33	166	142	M8	M5	277	20	15	233	68	343	85
90	PPA80	70	28.5	33	200	142	M8	M5	289	20	15	254	71	343	105
110	PPA80	120	28.5	33	238	142	M12	M5	324	20	22	301	82	343	123

d (mm)	X5 (mm)	X6 (mm)	X7 (mm)	X10 (mm)	z (mm)
16	80	30	43	38.0	64
20	80	30	43	38.0	64
25	80	30	43	41.9	72
32	80	30	51	47.0	79
40	80	30	51	53.5	94
50	80	30	62	62.8	95
63	80	30	62	77.0	107
75	80	30	74	119.0	144
90	80	30	74	131.0	151
110	80	30	74	145.0	174

PVC-C Ball valve type 546 Pro P
DA (Double acting)
With manual override
With solvent cement spigots metric

Model:

- Control pressure supply through integrated NAMUR interface according VDI/VDE 3845
- Full plastic solution (actuator housing made of PP-GF)
- Visual position indicator
- Integrated stainless steel mounting inserts
- z-dimension, valve end and union nut are compatible with type 546 (1st Generation)

Option:

- Position feedback through double sensor with LED (PNP, NPN and NAMUR)
- Positioner RPC, RPC D, RPC PID
- Individual configuration of valves possible

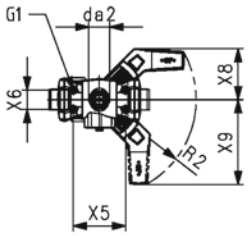

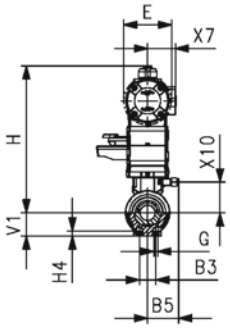

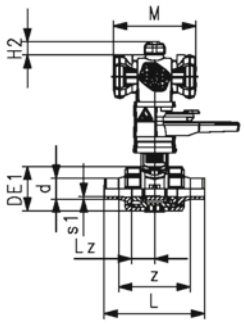

d (mm)	DN (mm)	Size (inch)	PN (bar)	kv-value (Δp=1 bar) (l/min)	EPDM Code	SP	Weight (kg)	FKM Code	SP	Weight (kg)
16	10	⅜	10	70	**199 250 502**	1	1.459	**199 250 512**	1	1.459
20	15	½	10	185	**199 250 503**	1	1.459	**199 250 513**	1	1.459
25	20	¾	10	350	**199 250 504**	1	1.576	**199 250 514**	1	1.576
32	25	1	10	700	**199 250 505**	1	1.700	**199 250 515**	1	1.700
40	32	1 ¼	10	1000	**199 250 506**	1	2.751	**199 250 516**	1	2.751
50	40	1 ½	10	1600	**199 250 507**	1	3.073	**199 250 517**	1	3.073
63	50	2	10	3100	**199 250 508**	1	3.931	**199 250 518**	1	3.931

d (mm)	B3 (mm)	B5 (mm)	da2 (mm)	DE1 (mm)	E (mm)	G (inch)	G1 (inch)	H (mm)	H2 (mm)	H4 (mm)	L (mm)	Lz (mm)	M (mm)	R2	s1 (mm)
16	25	16.2	33	50	74	M6	M5	215	20	12	114	28	128	R150	3.0
20	25	16.2	33	50	74	M6	M5	215	20	12	124	28	128	R150	3.0
25	25	17.5	33	58	74	M6	M5	219	20	12	144	33	128	R150	3.0
32	25	17.5	33	68	94	M6	M5	238	20	12	154	36	128	R150	4.0
40	45	23.3	33	84	94	M8	M5	244	20	15	174	43	159	R150	4.5
50	45	23.3	33	97	120	M8	M5	273	20	15	194	45	159	R150	5.5
63	45	24.3	33	124	120	M8	M5	288	20	15	224	51	184	R150	7.0

d (mm)	V1 (mm)	X5 (mm)	X6 (mm)	X7 (mm)	X8 (mm)	X9 (mm)	X10 (mm)	z (mm)
16	27	80	30	43	78	132	38.00	88
20	27	80	30	43	78	132	38.00	96
25	30	80	30	43	78	132	41.90	112
32	36	80	30	51	78	132	47.00	118
40	44	80	30	51	78	132	53.50	134
50	51	80	30	62	78	132	62.75	148
63	64	80	30	62	78	132	77.00	170

PVC-C Ball valve type 546 Pro with PPA
DA (Double Acting)
With solvent cement sockets PVC-C ISO
With manual override

Model:

- Control pressure supply through integrated NAMUR interface according VDI/VDE 3845
- Full plastic solution (actuator housing made of PP-GF)
- Visual position indicator
- Integrated stainless steel mounting inserts
- z-dimension, valve end and union nut are compatible with type 546 (1st Generation)

Option:

- Position feedback through double sensor with LED (PNP, NPN and NAMUR)
- Positioner RPC, RPC D, RPC PID
- Individual configuration of valves possible

d (mm)	DN (mm)	Size (inch)	PN (bar)	kv-value (Δp=1 bar) (l/min)	EPDM Code	SP	Weight (kg)	FKM Code	SP	Weight (kg)
16	10	⅜	10	70	**199 250 482**	1	1.459	**199 250 492**	1	1.459
20	15	½	10	185	**199 250 483**	1	1.459	**199 250 493**	1	1.459
25	20	¾	10	350	**199 250 484**	1	1.576	**199 250 494**	1	1.576
32	25	1	10	700	**199 250 485**	1	1.269	**199 250 495**	1	1.700
40	32	1 ¼	10	1000	**199 250 486**	1	2.751	**199 250 496**	1	2.751
50	40	1 ½	10	1600	**199 250 487**	1	3.073	**199 250 497**	1	3.073
63	50	2	10	3100	**199 250 488**	1	3.931	**199 250 498**	1	3.931

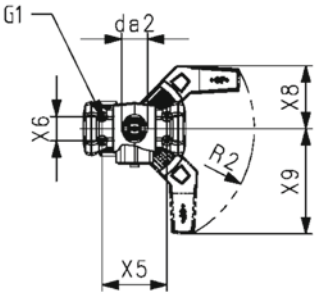

d (mm)	Actuator	B3 (mm)	B5 (mm)	da2 (mm)	DE1 (mm)	E (mm)	G (mm)	G1 (mm)	H (mm)	H2 (mm)	H4 (mm)	L (mm)	Lz (mm)	M (mm)	R2
16	PPA08	25	16.2	33	50	74	M6	M5	215	20	12	92	28	128	R150
20	PPA08	25	16.2	33	50	74	M6	M5	215	20	12	95	28	128	R150
25	PPA08	25	17.5	33	58	74	M6	M5	219	20	12	110	33	128	R150
32	PPA08	25	17.5	33	68	94	M6	M5	238	20	12	123	36	128	R150
40	PPA15	45	23.3	33	84	94	M8	M5	244	20	15	146	43	159	R150
50	PPA15	45	23.3	33	97	120	M8	M5	273	20	15	157	45	159	R150
63	PPA40	45	24.3	33	124	120	M8	M5	288	20	15	183	51	184	R150

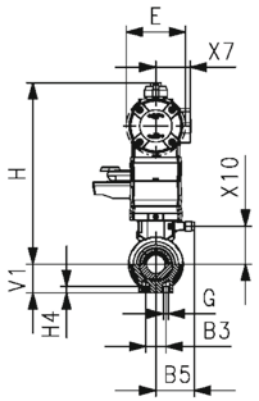

d (mm)	V1 (mm)	X5 (mm)	X6 (mm)	X7 (mm)	X8 (mm)	X9 (mm)	X10 (mm)	z (mm)
16	27	80	30	43	78	132	38.0	64
20	27	80	30	43	78	132	38.0	64
25	30	80	30	43	78	132	41.9	72
32	36	80	30	51	78	132	47.0	79
40	44	80	30	51	78	132	53.5	94
50	51	80	30	62	78	132	62.8	95
63	64	80	30	62	78	132	77.0	107

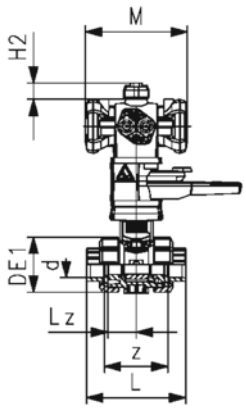

PVC-C Ball valve type 546 Pro with PPA
FO (Fail Safe to Open)
With solvent cement spigots PVC-C ISO
With manual override

Model:

- Control pressure supply through integrated NAMUR interface according VDI/VDE 3845
- Full plastic solution (actuator housing made of PP-GF)
- Visual position indicator
- Integrated stainless steel mounting inserts
- z-dimension, valve end and union nut are compatible with type 546 (1st Generation)

Option:

- Position feedback through double sensor with LED (PNP, NPN and NAMUR)
- Positioner RPC, RPC D, RPC PID
- Individual configuration of valves possible

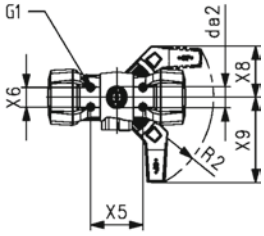

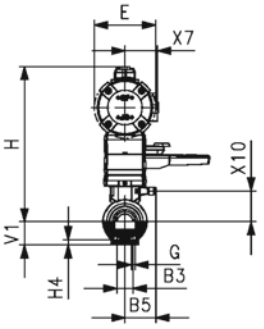

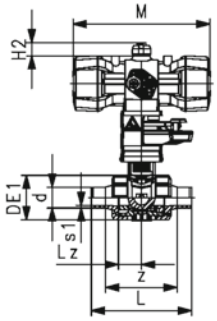

d (mm)	DN (mm)	PN (bar)	Size (inch)	kv-value (Δp=1 bar) (l/min)	EPDM Code	SP	Weight (kg)	FKM Code	SP	Weight (kg)
16	10	10	⅜	70	**199 250 462**	1	1.459	**199 250 472**	1	1.459
20	15	10	½	185	**199 250 463**	1	1.459	**199 250 473**	1	1.459
25	20	10	¾	350	**199 250 464**	1	1.576	**199 250 474**	1	1.576
32	25	10	1	700	**199 250 465**	1	1.700	**199 250 475**	1	1.700
40	32	10	1 ¼	1000	**199 250 466**	1	2.751	**199 250 476**	1	2.751
50	40	10	1 ½	1600	**199 250 467**	1	3.073	**199 250 477**	1	3.073
63	50	10	2	3100	**199 250 468**	1	3.931	**199 250 478**	1	3.931

d (mm)	Actuator	B3 (mm)	B5 (mm)	da2 (mm)	DE1 (mm)	E (mm)	G (mm)	G1 (mm)	H (mm)	H2 (mm)	H4 (mm)	L (mm)	Lz (mm)	M (mm)	R2
16	PPA08	25	16.2	33	50	74	M6	M5	215	20	12	114	28	159	R150
20	PPA08	25	16.2	33	50	74	M6	M5	215	20	12	124	28	159	R150
25	PPA08	25	17.5	33	58	74	M6	M5	219	20	12	144	33	159	R150
32	PPA15	25	17.5	33	68	94	M6	M5	238	20	12	154	36	211	R150
40	PPA15	45	23.3	33	84	94	M8	M5	244	20	15	174	43	211	R150
50	PPA40	45	23.3	33	97	120	M8	M5	273	20	15	194	45	246	R150
63	PPA40	45	24.3	33	124	120	M8	M5	288	20	15	224	51	246	R150

d (mm)	s1 (mm)	V1 (mm)	X5 (mm)	X6 (mm)	X7 (mm)	X8 (mm)	X9 (mm)	X10 (mm)	z (mm)
16	3.0	27	80	30	43	78	132	38.00	88
20	3.0	27	80	30	43	78	132	38.00	96
25	3.0	30	80	30	43	78	132	41.90	112
32	4.0	36	80	30	51	78	132	47.00	118
40	4.5	44	80	30	51	78	132	53.50	134
50	5.5	51	80	30	62	78	132	62.75	148
63	7.0	64	80	30	62	78	132	77.00	170

PVC-C Ball valve type 546 Pro with PPA
FC (Fail Safe to Close)
With solvent cement spigots PVC-C ISO
With manual override

Model:

- Control pressure supply through integrated NAMUR interface according VDI/VDE 3845
- Full plastic solution (actuator housing made of PP-GF)
- Visual position indicator
- Integrated stainless steel mounting inserts
- z-dimension, valve end and union nut are compatible with type 546 (1st Generation)

Option:

- Position feedback through double sensor with LED (PNP, NPN and NAMUR)
- Positioner RPC, RPC D, RPC PID
- Individual configuration of valves possible

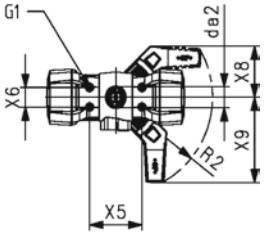

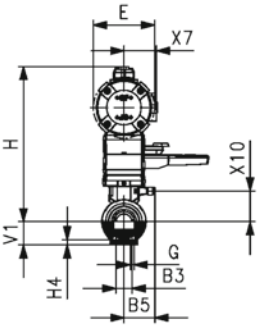

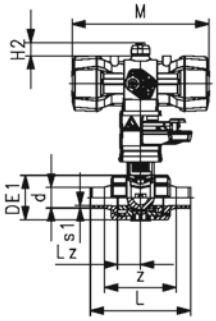

d (mm)	DN (mm)	PN (bar)	Size (inch)	kv-value (Δp=1 bar) (l/min)	EPDM Code	SP	Weight (kg)	FKM Code	SP	Weight (kg)
16	10	10	⅜	70	**199 250 422**	1	1.459	**199 250 432**	1	1.459
20	15	10	½	185	**199 250 423**	1	1.459	**199 250 433**	1	1.459
25	20	10	¾	350	**199 250 424**	1	1.576	**199 250 434**	1	1.576
32	25	10	1	700	**199 250 425**	1	1.700	**199 250 435**	1	1.700
40	32	10	1 ¼	1000	**199 250 426**	1	2.751	**199 250 436**	1	2.751
50	40	10	1 ½	1600	**199 250 427**	1	3.073	**199 250 437**	1	3.073
63	50	10	2	3100	**199 250 428**	1	3.931	**199 250 438**	1	3.931

d (mm)	Actuator	B3 (mm)	B5 (mm)	da2 (mm)	DE1 (mm)	E (mm)	G (mm)	G1 (mm)	H (mm)	H2 (mm)	H4 (mm)	L (mm)	Lz (mm)	M (mm)	R2
16	PPA08	25	16.2	33	50	74	M6	M5	215	20	12	114	28	159	R150
20	PPA08	25	16.2	33	50	74	M6	M5	215	20	12	124	28	159	R150
25	PPA08	25	17.5	33	58	74	M6	M5	219	20	12	144	33	159	R150
32	PPA15	25	17.5	33	68	94	M6	M5	238	20	12	154	36	211	R150
40	PPA15	45	23.3	33	84	94	M8	M5	244	20	15	174	43	211	R150
50	PPA40	45	23.3	33	97	120	M8	M5	273	20	15	194	45	246	R150
63	PPA40	45	24.3	33	124	120	M8	M5	288	20	15	224	51	246	R150

d (mm)	s1 (mm)	V1 (mm)	X5 (mm)	X6 (mm)	X7 (mm)	X8 (mm)	X9 (mm)	X10 (mm)	z (mm)
16	3.0	27	80	30	43	78	132	38.0	88
20	3.0	27	80	30	43	78	132	38.0	96
25	3.0	30	80	30	43	78	132	41.9	112
32	4.0	36	80	30	51	78	132	47.0	118
40	4.5	44	80	30	51	78	132	53.5	134
50	5.5	51	80	30	62	78	132	62.8	148
63	7.0	64	80	30	62	78	132	77.0	170

Ball valves pneumatic type 543 Pro

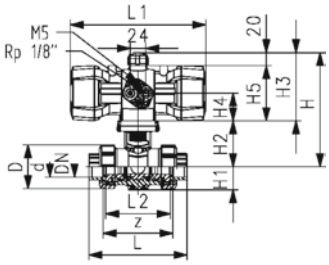

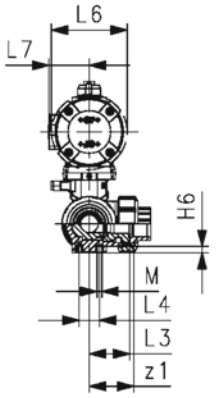

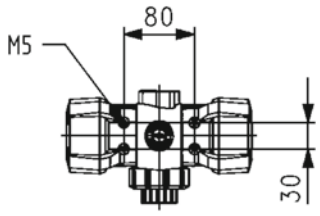

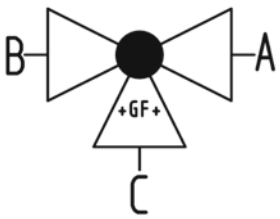

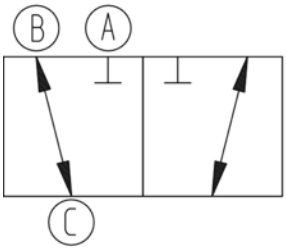

3-Way ball valve type 543 Pro P PVC-C
Horizontal/L-port
FC (Fail safe to close)
Without manual override
With solvent cement sockets metric

Model:

- Actuator fails safe to the closed position FC
- Control pressure supply through integrated NAMUR interface according VDI/VDE 3845 with 5.6 bar (81.2 psi)
- Basic position B-C opened, activated position A-C opened, see flow scheme
- Control time 90° <) 1-2s
- For easy installation and removal
- Integrated stainless steel mounting inserts
- Full plastic solution (actuator housing made of PP-GF)
- Visual position indicator
- Z-dimension, valve end and union nut are compatible with types 285 – 288 and 543 (1st Generation)

Option:

- Position feedback sensor, incl. LED feedback (DN10-50) - PNP, NPN and NAMUR
- Positioner RPC, RPC D, RPC PID
- Individual configuration of the valve

d (mm)	DN (mm)	Size (inch)	PN (bar)	kv-value (Δp=1 bar) (l/min)	EPDM Code	SP	Weight (kg)	FKM Code	SP	Weight (kg)
16	10	⅜	10	50	**199 295 102**	1	1.136	**199 295 112**	1	1.136
20	15	½	10	75	**199 295 103**	1	1.142	**199 295 113**	1	1.142
25	20	¾	10	150	**199 295 104**	1	1.280	**199 295 114**	1	1.280
32	25	1	10	280	**199 295 105**	1	1.486	**199 295 115**	1	1.486
40	32	1 ¼	10	480	**199 295 106**	1	2.619	**199 295 116**	1	2.619
50	40	1 ½	10	620	**199 295 107**	1	3.110	**199 295 117**	1	3.110
63	50	2	10	1230	**199 295 108**	1	4.585	**199 295 118**	1	4.585

d (mm)	Actuator	D (mm)	H (mm)	H1 (mm)	H2 (mm)	H3 (mm)	H4 (mm)	H5 (mm)	H6 (mm)	L (mm)	L1 (mm)	L2 (mm)	L3 (mm)	L4 (mm)	L6 (mm)
16	PPA08	50	157	28	62	95	41	75	8	109	159	73	36	25	74
20	PPA08	50	157	28	62	95	41	75	8	112	159	73	36	25	74
25	PPA15	58	179	32	71	108	45	88	8	131	211	86	43	25	94
32	PPA15	68	179	36	71	108	45	88	8	151	211	99	50	25	94
40	PPA40	84	215	45	84	131	56	111	9	181	246	120	60	45	120
50	PPA40	97	215	51	84	131	56	111	9	205	246	137	69	45	120
63	PPA40	124	237	65	106	131	56	111	9	261	246	179	89	45	120

d (mm)	L7 (mm)	M	z (mm)	z1 (mm)	closest inch (inch)
16	32	6	81	40	⅜
20	32	6	81	40	½
25	38	6	94	47	¾
32	38	6	107	54	1
40	47	8	130	65	1 ¼
50	47	8	143	72	1 ½
63	47	8	185	92	2

3-Way ball valve type 543 Pro P PVC-C
Horizontal/L-port
Without manual override
With solvent cement spigots metric

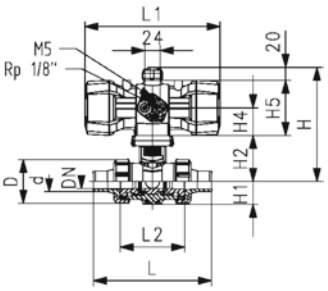

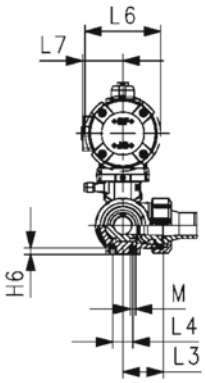

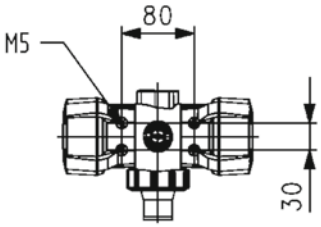

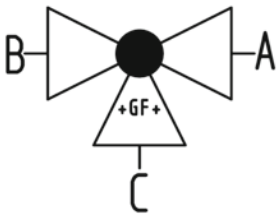

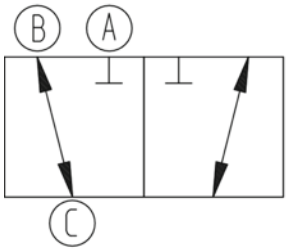

Model:

- Actuator fails safe to the closed position FC
- Control pressure supply through integrated NAMUR interface according VDI/VDE 3845 with 5.6 bar (81.2 psi)
- Basic position B-C opened, activated position A-C opened, see flow scheme
- Control time 90° <) 1-2s
- For easy installation and removal
- Integrated stainless steel mounting inserts
- Full plastic solution (actuator housing made of PP-GF)
- Visual position indicator
- Z-dimension, valve end and union nut are compatible with types 285 – 288 and 543 (1st Generation)

Option:

- Position feedback sensor, incl. LED feedback (DN10-50) - PNP, NPN and NAMUR
- Positioner RPC, RPC D, RPC PID
- Individual configuration of the valve

d (mm)	DN (mm)	Size (inch)	PN (bar)	kv-value (Δp=1 bar) (l/min)	EPDM Code	SP	Weight (kg)	FKM Code	SP	Weight (kg)
16	10	⅜	10	50	**199 295 082**	1	1.142	**199 295 092**	1	1.142
20	15	½	10	75	**199 295 083**	1	1.152	**199 295 093**	1	1.152
25	20	¾	10	150	**199 295 084**	1	1.296	**199 295 094**	1	1.296
32	25	1	10	280	**199 295 085**	1	1.512	**199 295 095**	1	1.512
40	32	1 ¼	10	480	**199 295 086**	1	2.642	**199 295 096**	1	2.642
50	40	1 ½	10	620	**199 295 087**	1	3.179	**199 295 097**	1	3.179
63	50	2	10	1230	**199 295 088**	1	4.722	**199 295 098**	1	4.722

d (mm)	Actuator	D (mm)	H (mm)	H1 (mm)	H2 (mm)	H3 (mm)	H4 (mm)	H5 (mm)	H6 (mm)	L (mm)	L1 (mm)	L2 (mm)	L3 (mm)	L4 (mm)	L6 (mm)
16	PPA08	50	157	28	62	95	41	75	8	131	159	73	36	25	74
20	PPA08	50	157	28	62	95	41	75	8	141	159	73	36	25	74
25	PPA15	58	179	32	71	108	45	88	8	165	211	86	43	25	94
32	PPA15	68	179	36	71	108	45	88	8	182	211	99	50	25	94
40	PPA40	84	215	45	84	131	56	111	9	209	246	120	60	45	120
50	PPA40	97	215	51	84	131	56	111	9	242	246	137	69	45	120
63	PPA40	124	237	65	106	131	56	111	9	302	246	179	89	45	120

d (mm)	L7 (mm)	M	closest inch (inch)
16	32	6	⅜
20	32	6	½
25	38	6	¾
32	38	6	1
40	47	8	1 ¼
50	47	8	1 ½
63	47	8	2

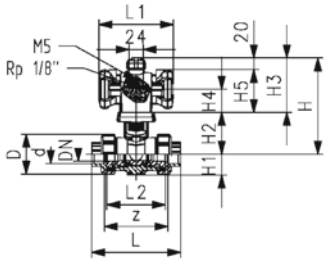

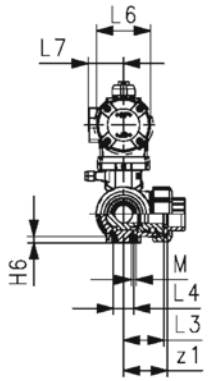

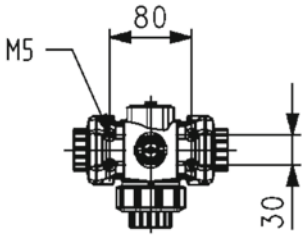

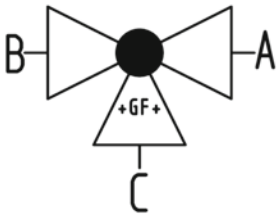

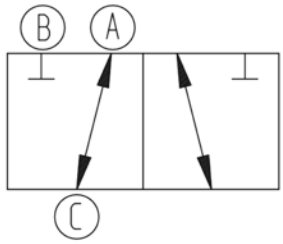

3-Way ball valve type 543 Pro PVC-C
Horizontal/L-port
DA (Double acting)
Without manual override
With solvent cement sockets metric

Model:

- Control pressure supply through integrated NAMUR interface according VDI/VDE 3845 with 5.6 bar (81.2 psi)
- Basic position A-C opened, activated position B-C opened, see flow scheme
- Control time 90° <) 1-2s
- For easy installation and removal
- Integrated stainless steel mounting inserts
- Full plastic solution (actuator housing made of PP-GF)
- Visual position indicator
- Z-dimension, valve end and union nut are compatible with types 285 – 288 and 543 (1st Generation)

Option:

- Position feedback sensor, incl. LED feedback (DN10-50) - PNP, NPN and NAMUR
- Positioner RPC, RPC D, RPC PID
- Individual configuration of the valve

d (mm)	DN (mm)	Size (inch)	PN (bar)	kv-value (Δp=1 bar) (l/min)	EPDM Code	SP	Weight (kg)	FKM Code	SP	Weight (kg)
16	10	⅜	10	50	**199 295 282**	1	0.945	**199 295 292**	1	0.945
20	15	½	10	75	**199 295 283**	1	0.952	**199 295 293**	1	0.952
25	20	¾	10	150	**199 295 284**	1	1.090	**199 295 294**	1	1.090
32	25	1	10	280	**199 295 285**	1	1.296	**199 295 295**	1	1.296
40	32	1 ¼	10	480	**199 295 286**	1	2.195	**199 295 296**	1	2.195
50	40	1 ½	10	620	**199 295 287**	1	2.686	**199 295 297**	1	2.686
63	50	2	10	1230	**199 295 288**	1	4.161	**199 295 298**	1	4.161

d (mm)	Actuator	D (mm)	H (mm)	H1 (mm)	H2 (mm)	H3 (mm)	H4 (mm)	H5 (mm)	H6 (mm)	L (mm)	L1 (mm)	L2 (mm)	L3 (mm)	L4 (mm)	L6 (mm)
16	PPA08	50	157	28	62	95	41	75	8	109	128	73	36	25	74
20	PPA08	50	157	28	62	95	41	75	8	112	128	73	36	25	74
25	PPA08	58	166	32	71	95	41	75	8	131	128	86	43	25	74
32	PPA08	68	166	36	71	95	41	75	8	151	128	99	50	25	74
40	PPA15	84	192	45	84	108	45	88	9	181	165	120	60	45	94
50	PPA15	97	192	51	84	108	45	88	9	205	165	137	69	45	94
63	PPA40	124	237	65	106	131	56	111	9	261	184	179	89	45	120

d (mm)	L7 (mm)	M	z (mm)	z1 (mm)	closest inch (inch)
16	32	6	81	40	⅜
20	32	6	81	40	½
25	32	6	94	47	¾
32	32	6	107	54	1
40	38	8	130	65	1 ¼
50	38	8	143	72	1 ½
63	47	8	185	92	2

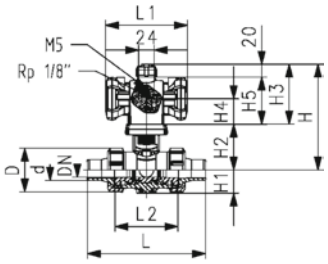

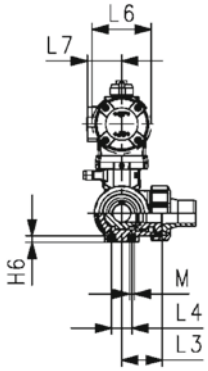

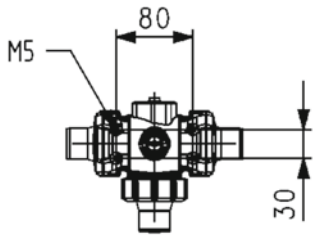

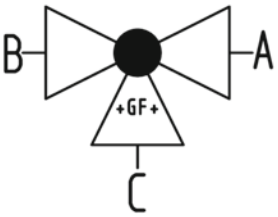

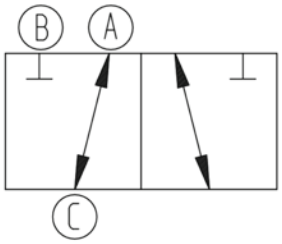

3-Way ball valve type 543 Pro P PVC-C
Horizontal/L-port
DA (Double acting)
Without manual override
With solvent cement spigots metric

Model:

- Control pressure supply through integrated NAMUR interface according VDI/VDE 3845 with 5.6 bar (81.2 psi)
- Basic position A-C opened, activated position B-C opened, see flow scheme
- Control time 90° <) 1-2s
- For easy installation and removal
- Integrated stainless steel mounting inserts
- Full plastic solution (actuator housing made of PP-GF)
- Visual position indicator
- Z-dimension, valve end and union nut are compatible with types 285 – 288 and 543 (1st Generation)

Option:

- Position feedback sensor, incl. LED feedback (DN10-50) - PNP, NPN and NAMUR
- Positioner RPC, RPC D, RPC PID
- Individual configuration of the valve possible

d (mm)	DN (mm)	Size (inch)	PN (bar)	kv-value (Δp=1 bar) (l/min)	EPDM Code	SP	Weight (kg)	FKM Code	SP	Weight (kg)
16	10	⅜	10	50	**199 295 262**	1	0.952	**199 295 272**	1	0.952
20	15	½	10	75	**199 295 263**	1	0.962	**199 295 273**	1	0.962
25	20	¾	10	150	**199 295 264**	1	1.106	**199 295 274**	1	1.106
32	25	1	10	280	**199 295 265**	1	1.322	**199 295 275**	1	1.322
40	32	1 ¼	10	480	**199 295 266**	1	2.218	**199 295 276**	1	2.218
50	40	1 ½	10	620	**199 295 267**	1	2.755	**199 295 277**	1	2.755
63	50	2	10	1230	**199 295 268**	1	4.298	**199 295 278**	1	4.298

d (mm)	Actuator	D (mm)	H (mm)	H1 (mm)	H2 (mm)	H3 (mm)	H4 (mm)	H5 (mm)	H6 (mm)	L (mm)	L1 (mm)	L2 (mm)	L3 (mm)	L4 (mm)	L6 (mm)
16	PPA08	50	157	28	62	95	41	75	8	131	128	73	36	25	74
20	PPA08	50	157	28	62	95	41	75	8	141	128	73	36	25	74
25	PPA08	58	166	32	71	95	41	75	8	165	128	86	43	25	74
32	PPA08	68	166	36	71	95	41	75	8	182	128	99	50	25	74
40	PPA15	84	192	45	84	108	45	88	9	209	165	120	60	45	94
50	PPA15	97	192	51	84	108	45	88	9	242	165	137	69	45	94
63	PPA40	124	237	65	106	131	56	111	9	302	184	179	89	45	120

d (mm)	L7 (mm)	M	closest inch (inch)
16	32	6	⅜
20	32	6	½
25	32	6	¾
32	32	6	1
40	38	8	1 ¼
50	38	8	1 ½
63	47	8	2

3-Way ball valve type 543 Pro P PVC-C
Horizontal/T-port
Without manual override
With solvent cement spigots metric

Model:

- Actuator fails safe to the closed position FC
- Control pressure supply through integrated NAMUR interface according VDI/VDE 3845 with 5.6 bar (81.2 psi)
- Basic position B-C opened, activated position A-B-C opened, see flow scheme
- Control time 90° <) 1-2s
- For easy installation and removal
- Integrated stainless steel mounting inserts
- Full plastic solution (actuator housing made of PP-GF)
- Visual position indicator
- Z-dimension, valve end and union nut are compatible with types 285 – 288 and 543 (1st Generation)

Option:

- Position feedback sensor, incl. LED feedback (DN10-50) - PNP, NPN and NAMUR
- Positioner RPC, RPC D, RPC PID
- Individual configuration of the valve

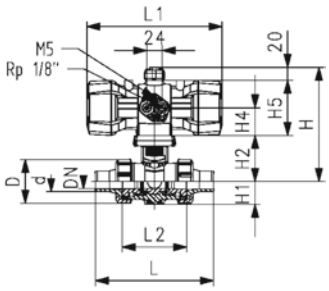

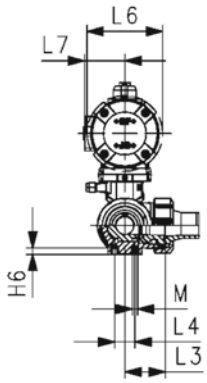

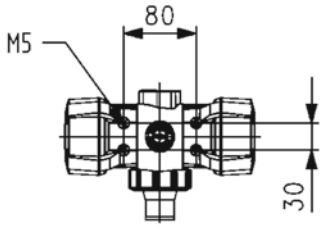

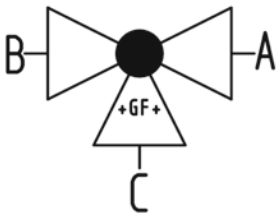

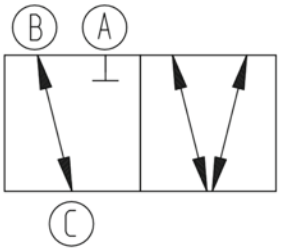

d (mm)	DN (mm)	Size (inch)	PN (bar)	kv-value (Δp=1 bar) (l/min)	EPDM Code	SP	Weight (kg)	FKM Code	SP	Weight (kg)
16	10	⅜	10	140	**199 295 122**	1	1.141	**199 295 132**	1	1.141
20	15	½	10	200	**199 295 123**	1	1.151	**199 295 133**	1	1.151
25	20	¾	10	470	**199 295 124**	1	1.294	**199 295 134**	1	1.294
32	25	1	10	793	**199 295 125**	1	1.505	**199 295 135**	1	1.505
40	32	1 ¼	10	1290	**199 295 126**	1	2.630	**199 295 136**	1	2.630
50	40	1 ½	10	1910	**199 295 127**	1	3.156	**199 295 137**	1	3.156
63	50	2	10	3100	**199 295 128**	1	4.673	**199 295 138**	1	4.673

d (mm)	Actuator	D (mm)	H (mm)	H1 (mm)	H2 (mm)	H3 (mm)	H4 (mm)	H5 (mm)	H6 (mm)	L (mm)	L1 (mm)	L2 (mm)	L3 (mm)	L4 (mm)	L6 (mm)
16	PPA08	50	157	28	62	95	41	75	8	131	159	73	36	25	74
20	PPA08	50	157	28	62	95	41	75	8	141	159	73	36	25	74
25	PPA15	58	179	32	71	108	45	88	8	165	211	86	43	25	94
32	PPA15	68	179	36	71	108	45	88	8	182	211	99	50	25	94
40	PPA40	84	215	45	84	131	56	111	9	209	246	120	60	45	120
50	PPA40	97	215	51	84	131	56	111	9	242	246	137	69	45	120
63	PPA40	124	237	65	106	131	56	111	9	302	246	179	89	45	120

d (mm)	L7 (mm)	M	closest inch (inch)
16	32	6	⅜
20	32	6	½
25	38	6	¾
32	38	6	1
40	47	8	1 ¼
50	47	8	1 ½
63	47	8	2

3-Way ball valve type 543 Pro P PVC-C
Horizontal/T-port
FC (Fail safe to close)
Without manual override
With solvent cement sockets metric

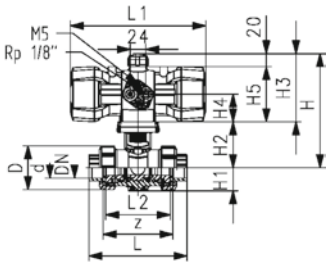

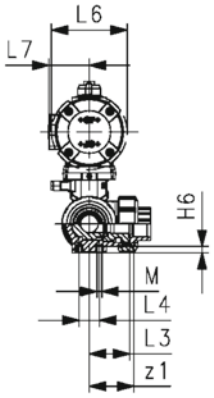

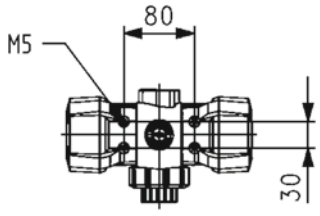

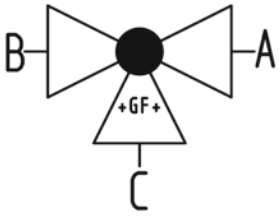

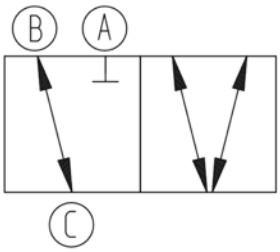

Model:

- Actuator fails safe to the closed position FC
- Control pressure supply through integrated NAMUR interface according VDI/VDE 3845 with 5.6 bar (81.2 psi)
- Basic position B-C opened, activated position A-B-C opened, see flow scheme
- Control time 90° <) 1-2s
- For easy installation and removal
- Integrated stainless steel mounting inserts
- Full plastic solution (actuator housing made of PP-GF)
- Visual position indicator
- Z-dimension, valve end and union nut are compatible with types 285 – 288 and 543 (1st Generation)

Option:

- Position feedback sensor, incl. LED feedback (DN10-50) - PNP, NPN and NAMUR
- Positioner RPC, RPC D, RPC PID
- Individual configuration of the valve

d (mm)	DN (mm)	Size (inch)	PN (bar)	kv-value (Δp=1 bar) (l/min)	EPDM Code	SP	Weight (kg)	FKM Code	SP	Weight (kg)
16	10	⅜	10	140	**199 295 142**	1	1.135	**199 295 152**	1	1.135
20	15	½	10	200	**199 295 143**	1	1.141	**199 295 153**	1	1.141
25	20	¾	10	470	**199 295 144**	1	1.278	**199 295 154**	1	1.278
32	25	1	10	793	**199 295 145**	1	1.479	**199 295 155**	1	1.479
40	32	1 ¼	10	1290	**199 295 146**	1	2.608	**199 295 156**	1	2.608
50	40	1 ½	10	1910	**199 295 147**	1	3.088	**199 295 157**	1	3.088
63	50	2	10	3100	**199 295 148**	1	4.536	**199 295 158**	1	4.536

d (mm)	Actuator	D (mm)	H (mm)	H1 (mm)	H2 (mm)	H3 (mm)	H4 (mm)	H5 (mm)	H6 (mm)	L (mm)	L1 (mm)	L2 (mm)	L3 (mm)	L4 (mm)	L6 (mm)
16	PPA08	50	157	28	62	95	41	75	8	109	159	73	36	25	74
20	PPA08	50	157	28	62	95	41	75	8	112	159	73	36	25	74
25	PPA15	58	179	32	71	108	45	88	8	131	211	86	43	25	94
32	PPA15	68	179	36	71	108	45	88	8	151	211	99	50	25	94
40	PPA40	84	215	45	84	131	56	111	9	181	246	120	60	45	120
50	PPA40	97	215	51	84	131	56	111	9	205	246	137	69	45	120
63	PPA40	124	237	65	106	131	56	111	9	261	246	179	89	45	120

d (mm)	L7 (mm)	M	z (mm)	z1 (mm)	closest inch (inch)
16	32	6	81	40	⅜
20	32	6	81	40	½
25	38	6	94	47	¾
32	38	6	107	54	1
40	47	8	130	65	1 ¼
50	47	8	143	72	1 ½
63	47	8	185	92	2

3-Way ball valve type 543 Pro P PVC-C
Horizontal/T-port
DA (Double acting)
Without manual override
With solvent cement sockets metric

Model:

- Control pressure supply through integrated NAMUR interface according VDI/VDE 3845 with 5.6 bar (81.2 psi)
- Basic position A-B-C opened, activated position B-C opened, see flow scheme
- Control time 90° <) 1-2s
- For easy installation and removal
- Integrated stainless steel mounting inserts
- Full plastic solution (actuator housing made of PP-GF)
- Visual position indicator
- Z-dimension, valve end and union nut are compatible with types 285 – 288 and 543 (1st Generation)

Option:

- Position feedback sensor, incl. LED feedback (DN10-50) - PNP, NPN and NAMUR
- Positioner RPC, RPC D, RPC PID
- Individual configuration of the valve

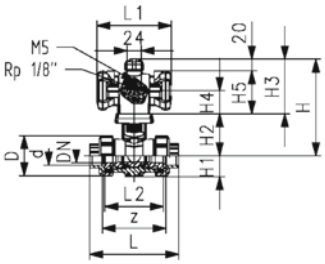

d (mm)	DN (mm)	Size (inch)	PN (bar)	kv-value (Δp=1 bar) (l/min)	EPDM Code	SP	Weight (kg)	FKM Code	SP	Weight (kg)
16	10	⅜	10	140	**199 295 322**	1	0.944	**199 295 332**	1	0.944
20	15	½	10	200	**199 295 323**	1	0.951	**199 295 333**	1	0.951
25	20	¾	10	470	**199 295 324**	1	1.088	**199 295 334**	1	1.088
32	25	1	10	793	**199 295 325**	1	1.289	**199 295 335**	1	1.289
40	32	1 ¼	10	1290	**199 295 326**	1	2.184	**199 295 336**	1	2.184
50	40	1 ½	10	1910	**199 295 327**	1	2.664	**199 295 337**	1	2.664
63	50	2	10	3100	**199 295 328**	1	4.112	**199 295 338**	1	4.112

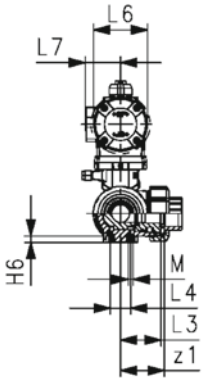

d (mm)	Actuator	D (mm)	H (mm)	H1 (mm)	H2 (mm)	H3 (mm)	H4 (mm)	H5 (mm)	H6 (mm)	L (mm)	L1 (mm)	L2 (mm)	L3 (mm)	L4 (mm)	L6 (mm)
16	PPA08	50	157	28	62	95	41	75	8	109	128	73	36	25	74
20	PPA08	50	157	28	62	95	41	75	8	112	128	73	36	25	74
25	PPA08	58	166	32	71	95	41	75	8	131	128	86	43	25	74
32	PPA08	68	166	36	71	95	41	75	8	151	128	99	50	25	74
40	PPA15	84	192	45	84	108	45	88	9	181	165	120	60	45	94
50	PPA15	97	192	51	84	108	45	88	9	205	165	137	69	45	94
63	PPA40	124	237	65	106	131	56	111	9	261	184	179	89	45	120

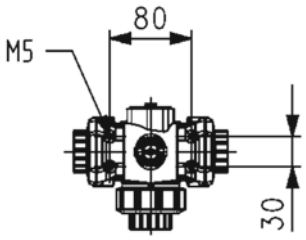

d (mm)	L7 (mm)	M	z (mm)	z1 (mm)	closest inch (inch)
16	32	6	81	40	⅜
20	32	6	81	40	½
25	32	6	94	47	¾
32	32	6	107	54	1
40	38	8	130	65	1 ¼
50	38	8	143	72	1 ½
63	47	8	185	92	2

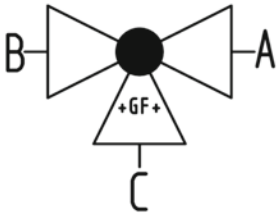

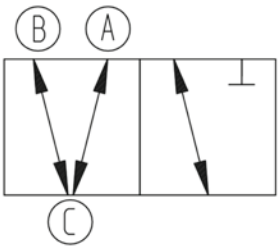

3-Way ball valve type 543 Pro P PVC-C
Horizontal/T-port
DA (Double acting)
Without manual override
With solvent cement spigots metric

Model:

- Control pressure supply through integrated NAMUR interface according VDI/VDE 3845 with 5.6 bar (81.2 psi)
- Basic position A-B-C opened, activated position B-C opened, see flow scheme
- For easy installation and removal
- Integrated stainless steel mounting inserts
- Full plastic solution (actuator housing made of PP-GF)
- Visual position indicator
- Z-dimension, valve end and union nut are compatible with types 285 – 288 and 543 (1st Generation)

Option:

- Position feedback sensor, incl. LED feedback (DN10-50) - PNP, NPN and NAMUR
- Positioner RPC, RPC D, RPC PID
- Individual configuration of the valve

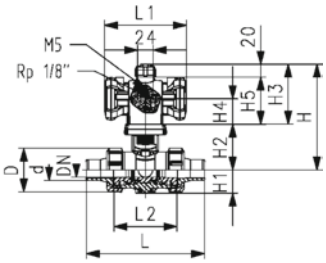

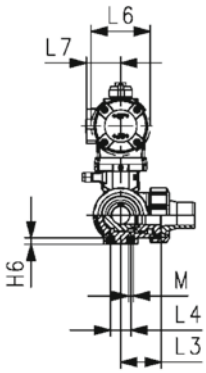

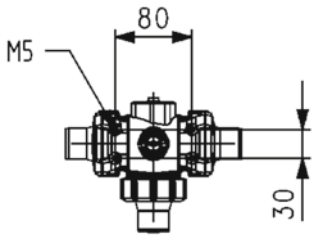

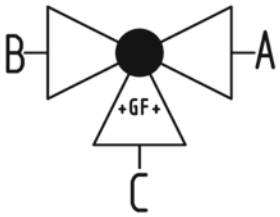

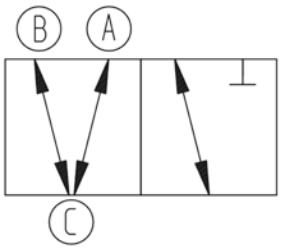

d (mm)	DN (mm)	Size (inch)	PN (bar)	kv-value (Δp=1 bar) (l/min)	EPDM Code	SP	Weight (kg)	FKM Code	SP	Weight (kg)
16	10	⅜	10	140	**199 295 302**	1	0.951	**199 295 312**	1	0.951
20	15	½	10	200	**199 295 303**	1	0.961	**199 295 313**	1	0.961
25	20	¾	10	470	**199 295 304**	1	1.104	**199 295 314**	1	1.104
32	25	1	10	793	**199 295 305**	1	1.315	**199 295 315**	1	1.315
40	32	1 ¼	10	1290	**199 295 306**	1	2.206	**199 295 316**	1	2.206
50	40	1 ½	10	1910	**199 295 307**	1	2.732	**199 295 317**	1	2.732
63	50	2	10	3100	**199 295 308**	1	4.249	**199 295 318**	1	4.249

d (mm)	Actuator	D (mm)	H (mm)	H1 (mm)	H2 (mm)	H3 (mm)	H4 (mm)	H5 (mm)	H6 (mm)	L (mm)	L1 (mm)	L2 (mm)	L3 (mm)	L4 (mm)	L6 (mm)
16	PPA08	50	157	28	62	95	41	75	8	131	128	73	36	25	74
20	PPA08	50	157	28	62	95	41	75	8	141	128	73	36	25	74
25	PPA08	58	166	32	71	95	41	75	8	165	128	86	43	25	74
32	PPA08	68	166	36	71	95	41	75	8	182	128	99	50	25	74
40	PPA15	84	192	45	84	108	45	88	9	209	165	120	60	45	94
50	PPA15	97	192	51	84	108	45	88	9	242	165	137	69	45	94
63	PPA40	124	237	65	106	131	56	111	9	302	184	179	89	45	120

d (mm)	L7 (mm)	M	closest inch (inch)
16	32	6	⅜
20	32	6	½
25	32	6	¾
32	32	6	1
40	38	8	1 ¼
50	38	8	1 ½
63	47	8	2

Butterfly valves type 567

Wafer-style intermediate installation butterfly valve type 567 PVC-C
Bare shaft
Flange standard metric/ANSI/BS/JIS

Model:

- Overall length according to EN 558, ISO 5752
- Connecting dimension: ISO 7005 PN 10, EN 1092 PN 10, DIN 2501 PN 10, ANSI/ASME B 16.5 Class 150, BS 1560: 1989, BS 4504, JIS B 2220
- Interface F07 according to DIN/ISO 5211

Note:

For some material combination (e.g. DN300 valves with PE/PP pipes) special flange adapters are needed. Please check the "Perfect flange connection tool" on www.gfps.com

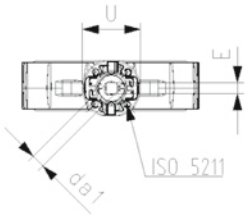

d (mm)	Size (inch)	DN (mm)	PN (bar)	kv-value (Δp=1 bar) (l/min)	EPDM Code	SP	Weight (kg)	FKM Code	SP	Weight (kg)
63	2	50	10	740	**163 567 802**	1	0.831	**163 567 822**	1	0.835
75	2 ½	65	10	1500	**163 567 803**	1	0.947	**163 567 823**	1	0.952
90	3	80	10	2400	**163 567 804**	1	1.079	**163 567 824**	1	1.097
110	4	100	10	3800	**163 567 805**	1	1.759	**163 567 825**	1	1.737
140	5	125	10	8600	**163 567 806**	1	2.361	**163 567 826**	1	2.379
160	6	150	10	11400	**163 567 807**	1	3.289	**163 567 827**	1	3.364
225	8	200	10	19900	**163 567 808**	1	5.269	**163 567 828**	1	5.094
280	10	250	10	34000	**163 567 809**	1	12.700	**163 567 829**	1	11.700
315	12	300	10	50000	**163 567 810**	1	16.100	**163 567 830**	1	16.050

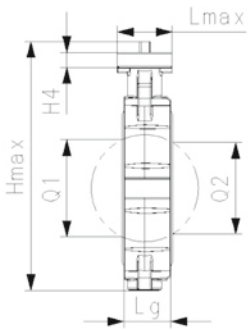

d (mm)	PTFE Code	Weight (kg)
63	**163 567 832**	0.947
75	**163 567 833**	0.947
90	**163 567 834**	1.079
110	**163 567 835**	1.759
140	**163 567 836**	2.361
160	**163 567 837**	3.289
225	**163 567 838**	5.269
280		
315		

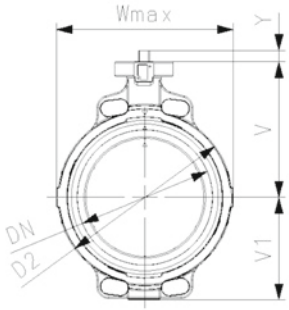

d (mm)	Hmax (mm)	Lmax (mm)	Wmax (mm)	U (mm)	V (mm)	H4 (mm)	V1 (mm)	Lg (mm)	D2 (mm)	Q1 (mm)	Q2 (mm)	Y (mm)	E (mm)	da1 (mm)
63	238.3	84.8	118.4	90	133.3	23	78.8	45	104	40		26.2	11	13.5
75	251.2	84.8	132.5	90	139.9	23	85.1	46	115	54	35	26.2	11	13.5
90	263.0	84.8	136.8	90	145.6	23	91.2	49	131	67	50	26.2	11	13.5
110	287.5	84.8	161.0	90	166.4	23	105.7	56	161	88	74	15.4	14	17.3
140	314.2	84.8	187.0	90	180.0	23	118.8	64	187	113	97	15.4	14	17.3
160	338.3	84.8	215.0	90	189.0	23	130.9	72	215	139	123	18.4	17	21.1
225	387.2	84.8	267.0	90	210.5	23	158.3	73	267	178	169	18.4	17	21.1
280	508.9	125.0	329.0	125	262.6	23	206.1	113	329	210	207	40.2	22	27.0
315	553.3	125.0	380.4	125	284.3	23	228.8	113	379	256	253	40.2	22	27.0

Wafer-style intermediate installation butterfly valve type 567 PVC-C
With hand lever
Flange standard metric/ANSI/BS/JIS

Model:

- Overall length according to EN 558, ISO 5752
- Connecting dimension: ISO 7005 PN 10, EN 1092 PN 10, DIN 2501 PN 10, ANSI/ASME B 16.5 Class 150, BS 1560: 1989, BS 4504, JIS B 2220

Note:

For some material combination (e.g. DN300 valves with PE/PP pipes) special flange adapters are needed. Please check the "Perfect flange connection tool" on www.gfps.com

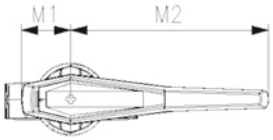

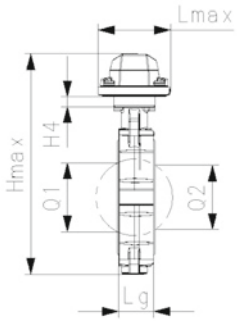

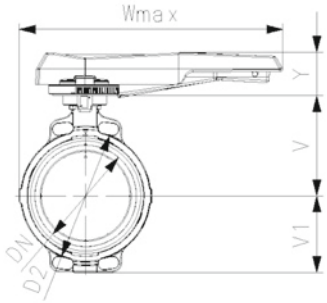

d (mm)	Size (inch)	DN (mm)	PN (bar)	kv-value (Δp=1 bar) (l/min)	EPDM Code	SP	Weight (kg)	FKM Code	SP	Weight (kg)
63	2	50	10	740	**163 567 002**	1	1.257	**163 567 022**	1	1.268
75	2 ½	65	10	1500	**163 567 003**	1	1.366	**163 567 023**	1	1.174
90	3	80	10	2400	**163 567 004**	1	1.542	**163 567 024**	1	1.997
110	4	100	10	3800	**163 567 005**	1	2.231	**163 567 025**	1	2.715
140	5	125	10	8600	**163 567 006**	1	2.820	**163 567 026**	1	2.536
160	6	150	10	11400	**163 567 007**	1	3.881	**163 567 027**	1	3.904
225	8	200	10	19900	**163 567 008**	1	5.873	**163 567 028**	1	6.803
280	10	250	10	34000	**163 567 009**	1	14.328	**163 567 029**	1	12.998
315	12	300	10	50000	**163 567 010**	1	18.899	**163 567 030**	1	19.139

d (mm)	PTFE Code	Weight (kg)
63	**163 567 202**	1.257
75	**163 567 203**	1.366
90	**163 567 204**	1.542
110	**163 567 205**	2.231
140	**163 567 206**	2.820
160	**163 567 207**	6.719
225	**163 567 208**	5.873
280		
315		

d (mm)	Hmax (mm)	Lmax (mm)	Wmax (mm)	U (mm)	V (mm)	H4 (mm)	V1 (mm)	Lg (mm)	D2 (mm)	Q1 (mm)	Q2 (mm)	Y (mm)	M1 (mm)	M2 (mm)
63	278.9	115.2	269.0	90	133.3	23	78.8	45	104	40		66.8	64.7	205.5
75	291.8	115.2	271.8	90	139.9	23	85.1	46	115	54	35	66.8	64.7	205.5
90	303.6	115.2	273.9	90	145.6	23	91.2	49	131	67	50	66.8	64.7	205.5
110	342.2	115.2	336.0	90	166.4	23	105.7	56	161	88	74	70.1	64.9	255.5
140	368.9	115.2	349.0	90	180.0	23	118.8	64	187	113	97	70.1	64.9	255.5
160	390.0	115.2	363.0	90	189.0	23	130.9	72	215	139	123	70.1	64.9	255.5
225	455.1	149.4	543.0	90	210.5	23	158.3	73	267	178	169	86.3	103.6	409.5
280	555.0	149.4	574.0	125	262.6	23	206.1	113	329	210	207	86.3	103.6	409.5
315	599.4	149.4	599.7	125	284.3	23	228.8	113	379	256	253	86.3	103.6	409.5

Wafer-style intermediate installation butterfly valve type 567 PVC-C
With gear box
Flange standard metric/ANSI/BS/JIS

Model:

- Overall length according to EN 558, ISO 5752
- Connecting dimension: ISO 7005 PN 10, EN 1092 PN 10, DIN 2501 PN 10, ANSI/ASME B 16.5 Class 150, BS 1560: 1989, BS 4504, JIS B 2220

Note:

For some material combination (e.g. DN300 valves with PE/PP pipes) special flange adapters are needed. Please check the "Perfect flange connection tool" on www.gfps.com

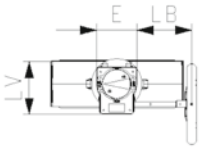

d (mm)	Size (inch)	DN (mm)	PN (bar)	kv-value (Δp=1 bar) (l/min)	EPDM Code	SP	Weight (kg)	FKM Code	SP	Weight (kg)
63	2	50	10	740	**163 567 042**	1	3.078	**163 567 062**	1	3.078
75	2 ½	65	10	1500	**163 567 043**	1	3.201	**163 567 063**	1	3.212
90	3	80	10	2400	**163 567 044**	1	3.384	**163 567 064**	1	3.391
110	4	100	10	3800	**163 567 045**	1	4.019	**163 567 065**	1	4.033
140	5	125	10	8600	**163 567 046**	1	4.526	**163 567 066**	1	4.526
160	6	150	10	11400	**163 567 047**	1	5.601	**163 567 067**	1	5.624
225	8	200	10	19900	**163 567 048**	1	7.326	**163 567 068**	1	7.354
280	10	250	10	34000	**163 567 049**	1	14.741	**163 567 069**	1	15.115
315	12	300	10	50000	**163 567 050**	1	19.254	**163 567 070**	1	35.000

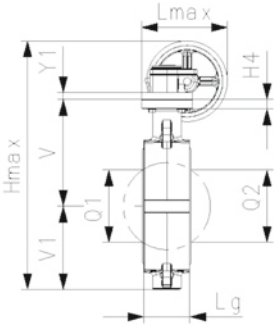

d (mm)	PTFE Code	Weight (kg)
63	**163 567 242**	3.078
75	**163 567 243**	3.201
90	**163 567 244**	3.384
110	**163 567 245**	4.019
140	**163 567 246**	4.526
160	**163 567 247**	5.601
225	**163 567 248**	7.326
280		
315		

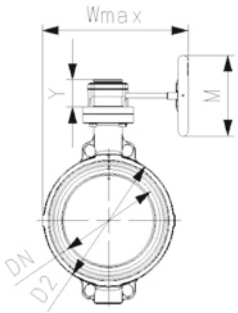

d (mm)	Hmax (mm)	Lmax (mm)	Wmax (mm)	U (mm)	V (mm)	H4 (mm)	V1 (mm)	Lg (mm)	D2 (mm)	Q1 (mm)	Q2 (mm)	Y (mm)	E (mm)	Y1 (mm)
63	319.4	169.1	240.2	90	133.3	23	78.8	45	104	40		61.2	80	
75	332.3	169.1	247.3	90	139.9	23	85.1	46	115	54	35	61.2	80	
90	344.1	169.1	249.4	90	145.6	23	91.2	49	131	67	50	61.2	80	
110	379.4	169.1	261.5	90	166.4	23	105.7	56	161	88	74	61.2	80	
140	406.1	169.1	274.5	90	180.0	23	118.8	64	187	113	97	61.2	80	
160	427.2	169.1	288.5	90	189.0	23	130.9	72	215	139	123	61.2	80	
225	476.1	169.1	267.0	90	210.5	23	158.3	73	267	178	169	61.2	80	
280	613.0	212.6	329.0	125	262.6	23	206.1	113	329	210	207	68.4	100	17
315	657.4	212.6	380.4	125	284.3	23	228.8	113	379	256	253	68.4	100	17

d (mm)	M (mm)	LV (mm)	LB (mm)
63	160	112.3	129.5
75	160	112.3	129.5
90	160	112.3	129.5
110	160	112.3	129.5
140	160	112.3	129.5
160	160	112.3	129.5
225	160	112.3	129.5
280	200	130.0	134.0
315	200	130.0	134.0

Butterfly valves type 578

Lug-style end installation butterfly valve type 578 PVC-C
Bare shaft
Flange standard metric

Model:

- Housing material: PP-GF30 with SS316 lug-inserts
- Overall length according to EN 558, ISO 5752 (DN50 - 200 line 25, DN250 - 300 line 10)
- Connecting dimension: ISO 7005 PN10, EN 1092 PN10, DIN 2501 PN10
- Interface F07 according to DIN/ISO 5211
- Interface F10 for the dimensions DN250-300 according to DIN/ISO 5211

Option:

- Optional accessory: Valve-Integrated position feedback with limit switches (limit switches have to be ordered separately)

Note:

For some material combination (e.g. DN300 valves with PE/PP pipes) special flange adapters are needed. Please check the "Perfect flange connection tool" on www.gfps.com

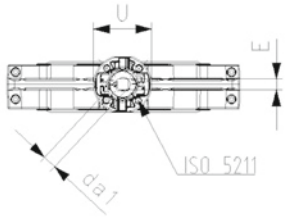

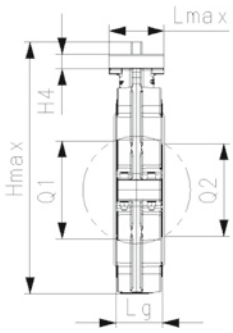

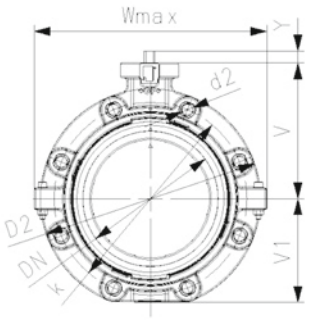

d (mm)	Size (inch)	DN (mm)	PN (bar)	kv-value (Δp=1 bar) (l/min)	EPDM Code	SP	Weight (kg)	FKM Code	SP	Weight (kg)
63	2	50	10	740	**163 578 802**	1	1.299	**163 578 822**	1	1.299
75	2 ½	65	10	1500	**163 578 803**	1	1.456	**163 578 823**	1	1.456
90	3	80	10	2400	**163 578 804**	1	1.701	**163 578 824**	1	1.701
110	4	100	10	3800	**163 578 805**	1	2.606	**163 578 825**	1	2.606
140	5	125	10	8600	**163 578 806**	1	4.120	**163 578 826**	1	4.120
160	6	150	10	11400	**163 578 807**	1	5.881	**163 578 827**	1	5.881
225	8	200	10	19900	**163 578 808**	1	7.125	**163 578 828**	1	7.125
280	10	250	10	34000	**163 578 809**	1	17.880	**163 578 829**	1	17.880
315	12	300	10	50000	**163 578 810**	1	24.416	**163 578 830**	1	24.416

d (mm)	Hmax (mm)	Lmax (mm)	Wmax (mm)	U (mm)	V (mm)	H4 (mm)	V1 (mm)	Lg (mm)	D2 (mm)	Q1 (mm)	Q2 (mm)	d2	da1 (mm)
63	238.3	84.8	159.5	90	133.3	23	78.8	160	160	40		M16	13.5
75	251.2	84.8	166.1	90	139.9	23	85.1	180	180	54	35	M16	13.5
90	263.0	84.8	171.8	90	145.6	23	91.2	195	195	67	50	M16	13.5
110	288.9	84.8	181.4	90	166.0	23	107.5	226	226	88	74	M16	17.3
140	318.1	84.8	195.4	90	180.0	23	122.7	258	258	113	97	M16	17.3
160	341.9	84.8	207.4	90	189.0	23	134.5	284	284	139	123	M20	21.1
225	390.4	84.8	228.9	90	210.5	23	161.5	341	341	178	169	M20	21.1
280	511.5	125.0	304.6	125	264.4	23	206.9	412	412	210	207	M20	27.0
315	560.9	125.0	325.4	125	285.2	23	235.5	482	482	256	253	M20	27.0

Lug-style end installation butterfly valve type 578 PVC-C
With hand lever
Flange standard metric

Model:

- Housing material: PP-GF30 with SS316 lug-inserts
- Overall length according to EN 558, ISO 5752 (DN50 - 200 line 25, DN250 - 300 line 10)
- Connecting dimension: ISO 7005 PN10, EN 1092 PN10, DIN 2501 PN10
- We recommend for the dimensions DN250 and DN300 only 6 bar maximum system pressure for the hand lever version

Option:

- Optional accessory: Valve-Integrated position feedback with limit switches (limit switches have to be ordered separately)

Note:

For some material combination (e.g. DN300 valves with PE/PP pipes) special flange adapters are needed. Please check the "Perfect flange connection tool" on www.gfps.com

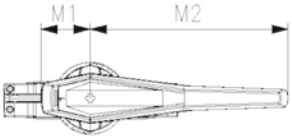

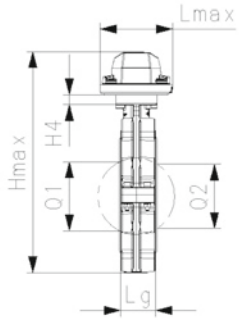

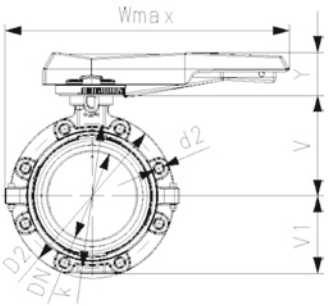

d (mm)	Size (inch)	DN (mm)	PN (bar)	kv-value (Δp=1 bar) (l/min)	EPDM Code	SP	Weight (kg)	FKM Code	SP	Weight (kg)
63	2	50	10	740	**163 578 002**	1	1.800	**163 578 022**	1	1.800
75	2 ½	65	10	1500	**163 578 003**	1	1.895	**163 578 023**	1	1.895
90	3	80	10	2400	**163 578 004**	1	2.251	**163 578 024**	1	2.251
110	4	100	10	3800	**163 578 005**	1	3.146	**163 578 025**	1	3.146
140	5	125	10	8600	**163 578 006**	1	4.660	**163 578 026**	1	4.660
160	6	150	10	11400	**163 578 007**	1	6.430	**163 578 027**	1	6.430
225	8	200	10	19900	**163 578 008**	1	8.625	**163 578 028**	1	8.625
280	10	250	6	34000	**163 578 009**	1	19.528	**163 578 029**	1	19.528
315	12	300	6	50000	**163 578 010**	1	26.106	**163 578 030**	1	26.106

d (mm)	Hmax (mm)	Lmax (mm)	Wmax (mm)	U (mm)	V (mm)	H4 (mm)	V1 (mm)	Lg (mm)	D2 (mm)	Q1 (mm)	Q2 (mm)	d2	Y (mm)	M1 (mm)
63	278.9	115.2	287.8	90	133.3	23	78.8	44.7	160	40		M16	66.8	63.7
75	291.8	115.2	296.3	90	139.9	23	85.1	45.7	180	54	35	M16	66.8	63.7
90	303.6	115.2	310.3	90	145.6	23	91.2	48.7	195	67	50	M16	66.8	63.7
110	343.6	115.2	375.2	90	166.0	23	107.5	55.6	226	88	74	M16	70.1	63.7
140	372.8	115.2	391.2	90	180.0	23	122.7	63.5	258	113	97	M16	70.1	63.7
160	393.6	115.2	395.2	90	189.0	23	134.5	71.5	284	139	123	M20	70.1	63.7
225	458.1	149.4	588.1	90	210.5	23	161.5	72.5	341	178	169	M20	86.1	101.7
280	557.6	149.4	628.1	125	264.4	23	206.9	113.2	412	210	207	M20	86.3	101.7
315	607.0	149.4	663.1	125	285.2	23	235.5	114.6	482	256	253	M20	86.3	101.7

d (mm)	M2 (mm)
63	205.3
75	205.3
90	205.3
110	255.2
140	255.2
160	255.2
225	408.1
280	408.1
315	408.1

Lug-style end installation butterfly valve type 578 PVC-C
With gear box
Flange standard metric

Model:

- Housing material: PP-GF30 with SS316 lug-inserts
- Overall length according to EN 558, ISO 5752 (DN50 - 200 line 25, DN250 - 300 line 10)
- Connecting dimension: ISO 7005 PN10, EN 1092 PN10, DIN 2501 PN10

Option:

- Optional accessory: Valve-Integrated position feedback with limit switches (limit switches have to be ordered separately)

Note:

For some material combination (e.g. DN300 valves with PE/PP pipes) special flange adapters are needed. Please check the "Perfect flange connection tool" on www.gfps.com

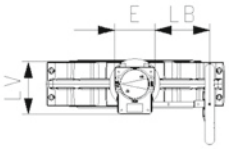

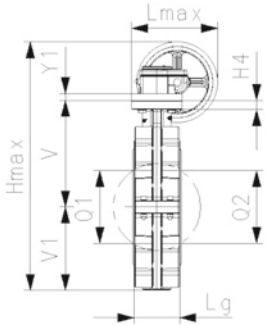

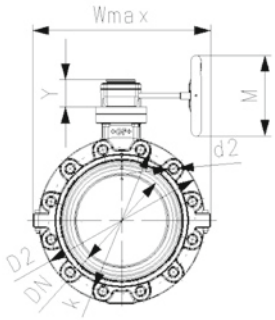

d (mm)	Size (inch)	DN (mm)	PN (bar)	kv-value (Δp=1 bar) (l/min)	EPDM Code	SP	Weight (kg)	FKM Code	SP	Weight (kg)
63	2	50	10	740	**163 578 042**	1	3.535	**163 578 062**	1	3.535
75	2 ½	65	10	1500	**163 578 043**	1	3.698	**163 578 063**	1	3.698
90	3	80	10	2400	**163 578 044**	1	3.929	**163 578 064**	1	3.929
110	4	100	10	3800	**163 578 045**	1	4.834	**163 578 065**	1	4.834
140	5	125	10	8600	**163 578 046**	1	6.348	**163 578 066**	1	6.348
160	6	150	10	11400	**163 578 047**	1	8.109	**163 578 067**	1	8.109
225	8	200	10	19900	**163 578 048**	1	9.353	**163 578 068**	1	9.353
280	10	250	10	34000	**163 578 049**	1	21.210	**163 578 069**	1	21.210
315	12	300	10	50000	**163 578 050**	1	27.746	**163 578 070**	1	27.746

d (mm)	Hmax (mm)	Lmax (mm)	Wmax (mm)	U (mm)	V (mm)	H4 (mm)	V1 (mm)	Lg (mm)	D2 (mm)	Q1 (mm)	Q2 (mm)	d2	Y (mm)	E (mm)
63	319.4	169.1	263.5	90	133.3	23	78.8	44.7	160	40		M16	61.2	80
75	332.3	169.1	272.0	90	139.9	23	85.1	45.7	180	54	35	M16	61.2	80
90	344.1	169.1	286.0	90	145.6	23	91.2	48.7	195	67	50	M16	61.2	80
110	380.8	169.1	301.0	90	166.0	23	107.5	55.6	226	88	74	M16	61.2	80
140	410.0	169.1	317.0	90	180.0	23	122.7	63.5	258	113	97	M16	61.2	80
160	430.8	169.1	321.0	90	189.0	23	134.5	71.5	284	139	123	M20	61.2	80
225	479.3	169.1	360.0	90	210.5	23	161.5	72.5	341	178	169	M20	61.2	80
280	615.6	212.6	440.0	125	264.4	23	206.9	113.2	412	210	207	M20	68.4	100
315	665.0	212.6	510.0	125	285.2	23	235.5	114.6	482	256	253	M20	68.4	100

d (mm)	Y1 (mm)	M (mm)	LV (mm)	LB (mm)
63		160	112.3	129.5
75		160	112.3	129.5
90		160	112.3	129.5
110		160	112.3	129.5
140		160	112.3	129.5
160		160	112.3	129.5
225		160	112.3	129.5
280	17.0	200	130.0	134.0
315	17.0	200	130.0	134.0

Butterfly valves electric type 145

Wafer-style intermediate installation butterfly valve type 145 PVC-C
With electric actuator 230V
With manual override
Flange standard metric/ANSI/BS/JIS

Model:

- Voltage 100-230V, 50-60Hz
- Factory set control range 90°<)
- Heating element, position feedback (Open/Close/ Middle)
- Overall length according to EN 558, ISO 5752 (DN50-200 line 25, DN250-300 line 16)
- Connecting dimension: ISO 7005 PN 10, EN 1092 PN 10, DIN 2501 PN 10, ANSI/ASME B 16.5 Class 150, BS 1560: 1989, BS 4504, JIS B 2220

Option:

- Other valve and actuator configurations available
- Optional accessories: Fail-safe return unit, Monitoring board, Position controller, Profibus DP board

Note:

For some material combination (e.g. DN300 valves with PE/PP pipes) special flange adapters are needed. Please check the "Perfect flange connection tool" on www.gfps.com

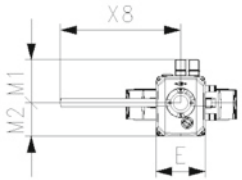

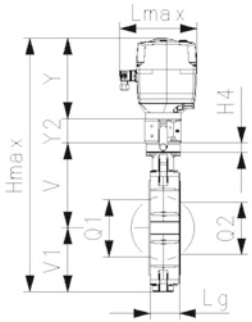

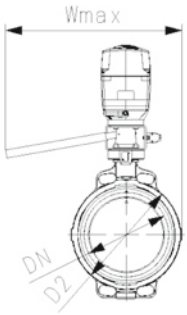

d (mm)	Size (inch)	DN (mm)	PN (bar)	kv-value (Δp=1 bar) (l/min)	EPDM Code	Weight (kg)	PTFE Code
63	2	50	10	740	**199 145 162**	5.678	**199 145 762**
75	2 ½	65	10	1500	**199 145 163**	5.801	**199 145 763**
90	3	80	10	2400	**199 145 164**	5.984	**199 145 764**
110	4	100	10	3800	**199 145 165**	6.619	**199 145 765**
140	5	125	10	8600	**199 145 166**	5.732	**199 145 766**
160	6	150	10	11400	**199 145 167**	8.201	**199 145 767**
225	8	200	10	19900	**199 145 168**	14.466	**199 145 768**

d (mm)	Hmax (mm)	Lmax (mm)	Wmax (mm)	U (mm)	V (mm)	H4 (mm)	V1 (mm)	Lg (mm)	D2 (mm)	Q1 (mm)	Q2 (mm)	Y (mm)	E (mm)	X8 (mm)
63	461.4	190	356.7	90	133.3	23	78.8	45	104	40		189.3	122.3	297.5
75	474.3	190	363.8	90	139.9	23	85.1	46	115	54	35	189.3	122.3	297.5
90	486.1	190	365.9	90	145.6	23	91.2	49	131	67	50	189.3	122.3	297.5
110	521.4	190	378.0	90	166.4	23	105.7	56	161	88	74	189.3	122.3	297.5
140	548.1	190	391.0	90	180.0	23	118.8	64	187	113	97	189.3	122.3	297.5
160	569.2	190	405.0	90	189.0	23	130.9	72	215	139	123	189.3	122.3	297.5
225	628.1	190	431.0	90	210.5	23	158.3	73	267	178	169	189.3	122.3	297.5

d (mm)	Y2 (mm)	M1 (mm)	M2 (mm)
63	60	107.3	82.7
75	60	107.3	82.7
90	60	107.3	82.7
110	60	107.3	82.7
140	60	107.3	82.7
160	60	107.3	82.7
225	60	107.3	82.7

Wafer-style intermediate installation butterfly valve type 145 PVC-C
With electric actuator 230V
Without manual override
Flange standard metric/ANSI/BS/JIS

Model:

- Voltage 100-230V, 50-60Hz
- Factory set control range 90°<)
- Heating element, position feedback (Open/Close/ Middle)
- Overall length according to EN 558, ISO 5752 (DN50-200 line 25, DN250-300 line 16)
- Connecting dimension: ISO 7005 PN 10, EN 1092 PN 10, DIN 2501 PN 10, ANSI/ASME B 16.5 Class 150, BS 1560: 1989, BS 4504, JIS B 2220

Option:

- Other valve and actuator configurations available
- Optional accessories: Fail-safe return unit, Monitoring board, Position controller, Profibus DP board

Note:

For some material combination (e.g. DN300 valves with PE/PP pipes) special flange adapters are needed. Please check the "Perfect flange connection tool" on www.gfps.com

d (mm)	Size (inch)	DN (mm)	PN (bar)	kv-value (Δp=1 bar) (l/min)	EPDM Code	Weight (kg)	FKM Code	Weight (kg)	PTFE Code
63	2	50	10	740	**199 145 202**	3.189	**199 145 222**	3.193	**199 145 722**
75	2 ½	65	10	1500	**199 145 203**	3.189	**199 145 223**	4.312	**199 145 723**
90	3	80	10	2400	**199 145 204**	4.484	**199 145 224**	4.491	**199 145 724**
110	4	100	10	3800	**199 145 205**	5.119	**199 145 225**	5.133	**199 145 725**
140	5	125	10	8600	**199 145 206**	4.719	**199 145 226**	4.737	**199 145 726**
160	6	150	10	11400	**199 145 207**	6.701	**199 145 227**	6.724	**199 145 727**
225	8	200	10	19900	**199 145 208**	12.966	**199 145 228**	12.994	**199 145 728**
280	10	250	6	34000	**199 145 209**	14.334	**199 145 229**	14.481	
315	12	300	4	50000	**199 145 210**	19.546	**199 145 230**	19.546	

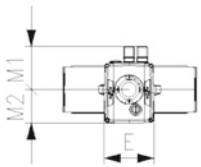

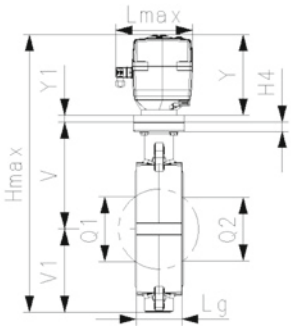

d (mm)	Hmax (mm)	Lmax (mm)	Wmax (mm)	U (mm)	V (mm)	H4 (mm)	V1 (mm)	Lg (mm)	D2 (mm)	Q1 (mm)	Q2 (mm)	Y (mm)	E (mm)	Y1 (mm)
63	393.3	190	118.4	90	133.3	23	78.8	45	104	40		166.2	122.3	15
75	406.2	190	132.5	90	139.9	23	85.1	46	115	54	35	166.2	122.3	15
90	426.1	190	136.8	90	145.6	23	91.2	49	131	67	50	189.3	122.3	
110	461.4	190	161.0	90	166.4	23	105.7	56	161	88	74	189.3	122.3	
140	488.1	190	187.0	90	180.0	23	118.8	64	187	113	97	189.3	122.3	
160	509.2	190	215.0	90	189.0	23	130.9	72	215	139	123	189.3	122.3	
225	568.1	190	267.0	90	210.5	23	158.3	73	267	178	169	199.3	122.3	
280	685.0	190	329.0	125	262.6	23	206.1	113	329	210	207	199.3	122.3	17
315	729.4	190	380.4	125	284.3	23	228.8	113	379	256	253	199.3	122.3	17

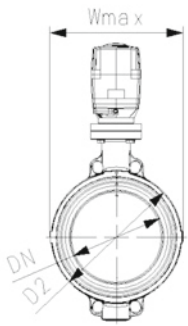

d (mm)	M1 (mm)	M2 (mm)
63	107.3	82.7
75	107.3	82.7
90	107.3	82.7
110	107.3	82.7
140	107.3	82.7
160	107.3	82.7
225	107.3	82.7
280	107.3	82.7
315	107.3	82.7

Wafer-style intermediate installation butterfly valve type 145 PVC-C
With electric actuator 24V
With manual override
Flange standard metric/ANSI/BS/JIS

Model:

- Voltage 24V AC/DC
- Factory set control range 90°<)
- Heating element, position feedback (Open/Close/ Middle)
- Overall length according to EN 558, ISO 5752 (DN50-200 line 25, DN250-300 line 16)
- Connecting dimension: ISO 7005 PN 10, EN 1092 PN 10, DIN 2501 PN 10, ANSI/ASME B 16.5 Class 150, BS 1560: 1989, BS 4504, JIS B 2220

Option:

- Other valve and actuator configurations available
- Optional accessories: Fail-safe return unit, Monitoring board, Position controller, Profibus DP board

Note:

For some material combination (e.g. DN300 valves with PE/PP pipes) special flange adapters are needed. Please check the "Perfect flange connection tool" on www.gfps.com

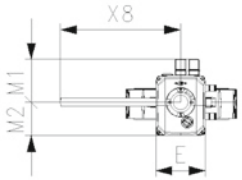

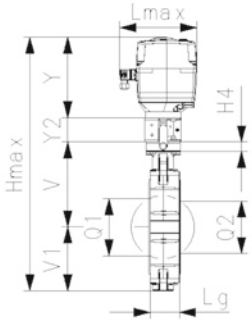

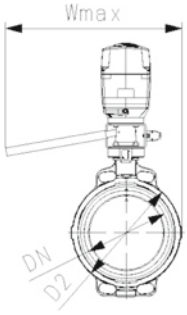

d (mm)	Size (inch)	DN (mm)	PN (bar)	kv-value (Δp=1 bar) (l/min)	EPDM Code	Weight (kg)	PTFE Code
63	2	50	10	740	**199 145 242**	5.678	**199 145 782**
75	2 ½	65	10	1500	**199 145 243**	5.801	**199 145 783**
90	3	80	10	2400	**199 145 244**	5.984	**199 145 784**
110	4	100	10	3800	**199 145 245**	6.619	**199 145 785**
140	5	125	10	8600	**199 145 246**	5.732	**199 145 786**
160	6	150	10	11400	**199 145 247**	8.201	**199 145 787**
225	8	200	10	19900	**199 145 248**	14.466	**199 145 788**

d (mm)	Hmax (mm)	Lmax (mm)	Wmax (mm)	U (mm)	V (mm)	H4 (mm)	V1 (mm)	Lg (mm)	D2 (mm)	Q1 (mm)	Q2 (mm)	Y (mm)	E (mm)	X8 (mm)
63	461.4	190	356.7	90	133.3	75	78.8	45	104	40		189.3	122.3	297.5
75	474.3	190	363.8	90	139.9	75	85.1	46	115	54	35	189.3	122.3	297.5
90	486.1	190	365.9	90	145.6	60	91.2	49	131	67	50	189.3	122.3	297.5
110	521.4	190	378.0	90	166.4	60	105.7	56	161	88	74	189.3	122.3	297.5
140	548.1	190	391.0	90	180.0	60	118.8	64	187	113	97	189.3	122.3	297.5
160	569.2	190	405.0	90	189.0	60	130.9	72	215	139	123	189.3	122.3	297.5
225	628.1	190	431.0	90	210.5	60	158.3	73	267	178	169	189.3	122.3	297.5

d (mm)	Y2 (mm)	M1 (mm)	M2 (mm)
63	60	107.3	82.7
75	60	107.3	82.7
90	60	107.3	82.7
110	60	107.3	82.7
140	60	107.3	82.7
160	60	107.3	82.7
225	60	107.3	82.7

Wafer-style intermediate installation butterfly valve type 145 PVC-C
With electric actuator 24V
Without manual override
Flange standard metric/ANSI/BS/JIS

Model:

- Voltage 24V AC/DC
- Factory set control range 90°<)
- Heating element, position feedback (Open/Close/ Middle)
- Overall length according to EN 558, ISO 5752 (DN50-200 line 25, DN250-300 line 16)
- Connecting dimension: ISO 7005 PN 10, EN 1092 PN 10, DIN 2501 PN 10, ANSI/ASME B 16.5 Class 150, BS 1560: 1989, BS 4504, JIS B 2220

Option:

- Other valve and actuator configurations available
- Optional accessories: Fail-safe return unit, Monitoring board, Position controller, Profibus DP board

Note:

For some material combination (e.g. DN300 valves with PE/PP pipes) special flange adapters are needed. Please check the "Perfect flange connection tool" on www.gfps.com

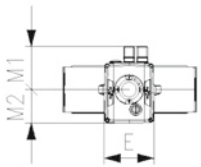

d (mm)	Size (inch)	DN (mm)	PN (bar)	kv-value (Δp=1 bar) (l/min)	EPDM Code	Weight (kg)	PTFE Code
63	2	50	10	740	**199 145 282**	3.189	**199 145 742**
75	2 ½	65	10	1500	**199 145 283**	4.301	**199 145 743**
90	3	80	10	2400	**199 145 284**	4.484	**199 145 744**
110	4	100	10	3800	**199 145 285**	5.119	**199 145 745**
140	5	125	10	8600	**199 145 286**	4.719	**199 145 746**
160	6	150	10	11400	**199 145 287**	6.701	**199 145 747**
225	8	200	10	19900	**199 145 288**	12.966	**199 145 748**
280	10	250	6	34000	**199 145 289**	14.334	
315	12	300	4	50000	**199 145 290**	19.546	

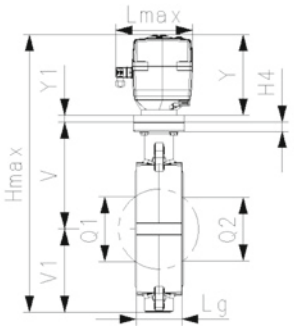

d (mm)	Hmax (mm)	Lmax (mm)	Wmax (mm)	U (mm)	V (mm)	H4 (mm)	V1 (mm)	Lg (mm)	D2 (mm)	Q1 (mm)	Q2 (mm)	Y (mm)	E (mm)	Y1 (mm)
63	393.3	190	118.4	90	133.3	23	78.8	45	104	40		166.2	122.3	15
75	406.2	190	132.5	90	139.9	23	85.1	46	115	54	35	166.2	122.3	15
90	426.1	190	136.8	90	145.6	23	91.2	49	131	67	50	189.3	122.3	
110	461.4	190	161.0	90	166.4	23	105.7	56	161	88	74	189.3	122.3	
140	488.1	190	187.0	90	180.0	23	118.8	64	187	113	97	189.3	122.3	
160	509.2	190	215.0	90	189.0	23	130.9	72	215	139	123	189.3	122.3	
225	568.1	190	267.0	90	210.5	23	158.3	73	267	178	169	199.3	122.3	
280	685.0	190	329.0	125	262.6	23	206.1	113	329	210	207	199.3	122.3	17
315	729.4	190	380.4	125	284.3	23	228.8	113	379	256	253	199.3	122.3	17

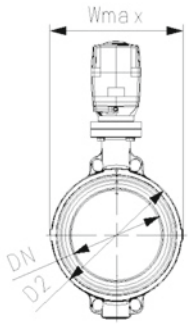

d (mm)	M1 (mm)	M2 (mm)
63	107.3	82.7
75	107.3	82.7
90	107.3	82.7
110	107.3	82.7
140	107.3	82.7
160	107.3	82.7
225	107.3	82.7
280	107.3	82.7
315	107.3	82.7

Butterfly valves electric type 146

Lug-Style end installation butterfly valve type 146 PVC-C
With electric actuator 230V
Without manual override
Flange standard metric

Model:

- Voltage 100-230V, 50-60Hz
- Factory set control range 90°<)
- Heating element, position feedback (Open/Close/ Middle)
- Overall length according to EN 558, ISO 5752 (DN50-200 line 25, DN250-300 line 16)
- Connecting dimension: ISO 7005 PN10, EN 1092 PN10, DIN 2501 PN10

Option:

- Other valve and actuator configurations available
- Optional accessories: Fail-safe return unit, Monitoring board, Position controller, Profibus DP board

Note:

For some material combination (e.g. DN300 valves with PE/PP pipes) special flange adapters are needed. Please check the "Perfect flange connection tool" on www.gfps.com

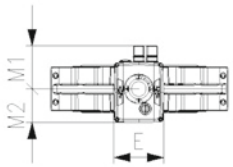

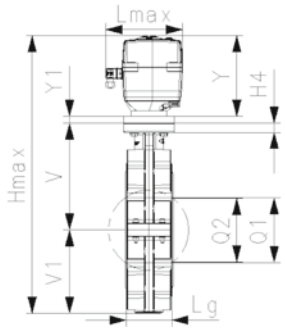

d (mm)	Size (inch)	DN (mm)	PN (bar)	kv-value (Δp=1 bar) (l/min)	EPDM Code	Weight (kg)	PTFE Code
63	2	50	10	740	**199 146 202**	4.299	**199 146 722**
75	2 ½	65	10	1500	**199 146 203**	4.456	**199 146 723**
90	3	80	10	2400	**199 146 204**	4.701	**199 146 724**
110	4	100	10	3800	**199 146 205**	5.606	**199 146 725**
140	5	125	10	8600	**199 146 206**	7.120	**199 146 726**
160	6	150	10	11400	**199 146 207**	8.881	**199 146 727**
225	8	200	10	19900	**199 146 208**	13.625	**199 146 728**
280	10	250	6	34000	**199 146 209**	24.385	
315	12	300	4	50000	**199 146 210**	30.916	

d (mm)	Hmax (mm)	Lmax (mm)	Wmax (mm)	U (mm)	V (mm)	H4 (mm)	V1 (mm)	Lg (mm)	D2 (mm)	Q1 (mm)	Q2 (mm)	d2	Y (mm)
63	378.3	190.0	165.0	90.0	133.3	23	78.8	44.7	160	40		M16	166.2
75	391.2	190.0	182.0	90.0	139.9	23	85.1	45.7	180	54	35	M16	166.2
90	426.1	190.0	210.0	90.0	145.6	23	91.2	48.7	195	67	50	M16	189.3
110	462.8	190.0	240.0	90.0	166.0	23	107.5	55.6	226	88	74	M16	189.3
140	492.0	190.0	272.0	90.0	180.0	23	122.7	63.5	258	113	97	M16	189.3
160	522.8	190.0	300.0	90.0	189.0	23	134.5	71.5	284	139	123	M20	199.3
225	571.3	190.0	360.0	90.0	210.5	23	161.5	72.5	341	178	169	M20	199.3
280	670.6	190.0	440.0	125.0	264.4	23	206.9	113.2	412	210	207	M20	199.3
315	720.0	190.0	510.0	125.0	285.2	23	235.5	114.6	482	256	253	M20	199.3

d (mm)	E (mm)	Y1 (mm)	M1 (mm)	M2 (mm)
63	122.3		107.3	82.7
75	122.3		107.3	82.7
90	122.3		107.3	82.7
110	122.3		107.3	82.7
140	122.3		107.3	82.7
160	122.3		107.3	82.7
225	122.3		107.3	82.7
280	122.3	17.0	107.3	82.7
315	122.3	17.0	107.3	82.7

Butterfly valves pneumatic type 240

Wafer-style intermediate installation butterfly valve type 240 PVC-C
With pneumatic actuator - fail safe to close (FC)
Without manual override
Flange standard metric/ANSI/BS/JIS

Model:

- Control range 90°<)
- Overall length according to EN 558, ISO 5752
- Connecting dimension: ISO 7005 PN 10, EN 1092 PN 10, DIN 2501 PN 10, ANSI/ASME B 16.5 Class 150, BS 1560: 1989, BS 4504, JIS B 2220

Note:

For some material combination (e.g. DN300 valves with PE/PP pipes) special flange adapters are needed. Please check the "Perfect flange connection tool" on www.gfps.com

d (mm)	Size (inch)	DN (mm)	PN (bar)	kv-value (Δp=1 bar) (l/min)	EPDM Code	SP	Weight (kg)	FKM Code	SP	Weight (kg)
63	2	50	10	740	**199 240 162**	1	3.218	**199 240 182**	1	3.218
75	2 ½	65	10	1500	**199 240 163**	1	3.341	**199 240 183**	1	3.352
90	3	80	10	2400	**199 240 164**	1	3.524	**199 240 184**	1	3.531
110	4	100	10	3800	**199 240 165**	1	5.271	**199 240 185**	1	5.371
140	5	125	10	8600	**199 240 166**	1	7.169	**199 240 186**	1	5.943
160	6	150	10	11400	**199 240 167**	1	10.184	**199 240 187**	1	10.285
225	8	200	10	19900	**199 240 168**	1	14.466	**199 240 188**	1	14.494

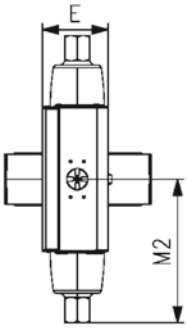

d (mm)	PTFE Code
63	**199 240 642**
75	**199 240 643**
90	**199 240 644**
110	**199 240 645**
140	**199 240 646**
160	**199 240 647**
225	**199 240 648**

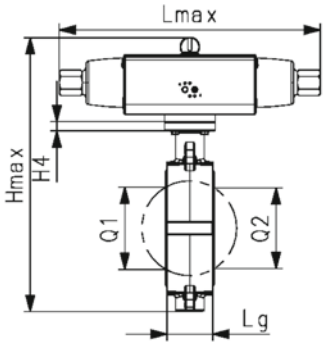

d (mm)	Hmax (mm)	Lmax (mm)	Wmax (mm)	U (mm)	V (mm)	H4 (mm)	V1 (mm)	Lg (mm)	D2 (mm)	d2 (mm)	Q1 (mm)	Q2 (mm)	Y (mm)	E (mm)
63	325.3	274.4	118.4	90	133.3	23	78.8	45	104	104	40		98.2	70.4
75	338.2	274.4	132.5	90	139.9	23	85.1	46	115	115	54	35	98.2	70.4
90	362.9	325.2	136.8	90	145.6	23	91.2	49	131	131	67	50	111.1	83.3
110	386.9	359.6	161.0	90	166.4	23	105.7	56	161	161	88	74	114.8	87.0
140	448.3	418.0	187.0	90	180.0	23	118.8	64	187	187	113	97	149.5	107.5
160	473.0	434.0	215.0	90	189.0	23	130.9	72	215	215	139	123	153.1	111.1
225	528.8	498.4	267.0	90	210.5	23	158.3	73	267	267	178	169	160.0	118.0

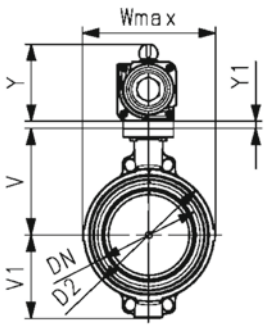

d (mm)	Y1 (mm)	M2 (mm)
63	15	137.2
75	15	137.2
90	15	162.6
110		179.8
140		209.0
160		217.0
225		249.2

Wafer-style intermediate installation butterfly valve type 240 PVC-C
With pneumatic actuator - fail safe to open (FO)
Without manual override
Flange standard metric/ANSI/BS/JIS

Model:

- Control range 90°<)
- Overall length according to EN 558, ISO 5752
- Connecting dimension: ISO 7005 PN 10, EN 1092 PN 10, DIN 2501 PN 10, ANSI/ASME B 16.5 Class 150, BS 1560: 1989, BS 4504, JIS B 2220

Note:

For some material combination (e.g. DN300 valves with PE/PP pipes) special flange adapters are needed. Please check the "Perfect flange connection tool" on www.gfps.com

d (mm)	Size (inch)	DN (mm)	PN (bar)	kv-value (Δp=1 bar) (l/min)	EPDM Code	SP	Weight (kg)	FKM Code	SP	Weight (kg)
63	2	50	10	740	**199 240 202**	1	3.439	**199 240 222**	1	3.443
75	2 ½	65	10	1500	**199 240 203**	1	3.341	**199 240 223**	1	3.352
90	3	80	10	2400	**199 240 204**	1	3.524	**199 240 224**	1	3.531
110	4	100	10	3800	**199 240 205**	1	5.357	**199 240 225**	1	5.371
140	5	125	10	8600	**199 240 206**	1	7.169	**199 240 226**	1	7.187
160	6	150	10	11400	**199 240 207**	1	10.262	**199 240 227**	1	10.285
225	8	200	10	19900	**199 240 208**	1	14.466	**199 240 228**	1	14.494

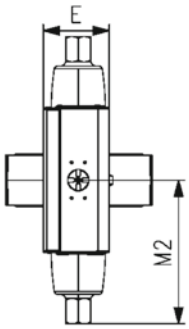

d (mm)	PTFE Code	Weight (kg)
63	**199 240 662**	2.072
75	**199 240 663**	2.176
90	**199 240 664**	2.824
110	**199 240 665**	3.563
140	**199 240 666**	4.384
160	**199 240 667**	10.262
225	**199 240 668**	14.466

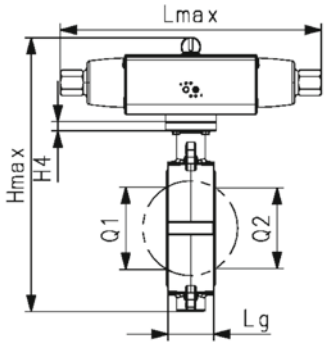

d (mm)	Hmax (mm)	Lmax (mm)	Wmax (mm)	U (mm)	V (mm)	H4 (mm)	V1 (mm)	Lg (mm)	D2 (mm)	Q1 (mm)	Q2 (mm)	Y (mm)	E (mm)	Y1 (mm)
63	325.3	274.4	118.4	90	133.3	23	78.8	45	104	40		98.2	70.4	15
75	338.2	274.4	132.5	90	139.9	23	85.1	46	115	54	35	98.2	70.4	15
90	362.9	325.2	136.8	90	145.6	23	91.2	49	131	67	50	111.1	83.3	15
110	386.9	359.6	161.0	90	166.4	23	105.7	56	161	88	74	114.8	87.0	
140	448.3	418.0	187.0	90	180.0	23	118.8	64	187	113	97	149.5	107.5	
160	473.0	434.0	215.0	90	189.0	23	130.9	72	215	139	123	153.1	111.1	
225	528.8	498.4	267.0	90	210.5	23	158.3	73	267	178	169	160.0	118.0	

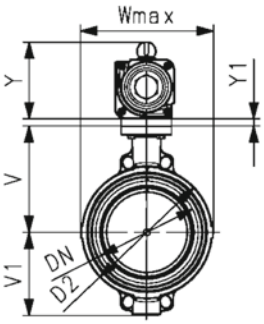

d (mm)	M2 (mm)
63	137.2
75	137.2
90	162.6
110	179.8
140	209.0
160	217.0
225	249.2

Wafer-style intermediate installation butterfly valve type 240 PVC-C
With pneumatic actuator - double acting (DA)
Without manual override
Flange standard metric/ANSI/BS/JIS

Model:

- Control range 90°<)
- Overall length according to EN 558, ISO 5752
- Connecting dimension: ISO 7005 PN 10, EN 1092 PN 10, DIN 2501 PN 10, ANSI/ASME B 16.5 Class 150, BS 1560: 1989, BS 4504, JIS B 2220

Note:

For some material combination (e.g. DN300 valves with PE/PP pipes) special flange adapters are needed. Please check the "Perfect flange connection tool" on www.gfps.com

d (mm)	Size (inch)	DN (mm)	PN (bar)	kv-value (Δp=1 bar) (l/min)	EPDM Code	SP	Weight (kg)	FKM Code	SP	Weight (kg)
63	2	50	10	740	**199 240 242**	1	5.184	**199 240 262**	1	2.293
75	2 ½	65	10	1500	**199 240 243**	1	2.191	**199 240 263**	1	2.202
90	3	80	10	2400	**199 240 244**	1	2.884	**199 240 264**	1	2.862
110	4	100	10	3800	**199 240 245**	1	3.609	**199 240 265**	1	3.623
140	5	125	10	8600	**199 240 246**	1	4.419	**199 240 266**	1	4.500
160	6	150	10	11400	**199 240 247**	1	6.741	**199 240 267**	1	6.764
225	8	200	10	19900	**199 240 248**	1	9.114	**199 240 268**	1	8.494

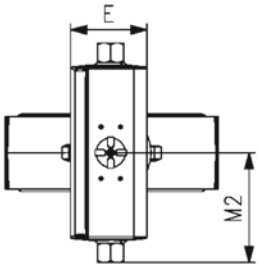

d (mm)	PTFE Code	Weight (kg)
63	**199 240 682**	5.184
75	**199 240 683**	2.191
90	**199 240 684**	2.884
110	**199 240 685**	3.609
140	**199 240 686**	4.419
160	**199 240 687**	6.741
225	**199 240 688**	8.466

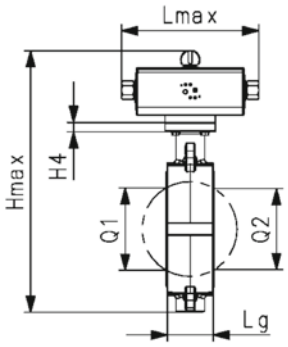

d (mm)	Hmax (mm)	Lmax (mm)	Wmax (mm)	U (mm)	V (mm)	H4 (mm)	V1 (mm)	Lg (mm)	D2 (mm)	Q1 (mm)	Q2 (mm)	Y (mm)	E (mm)	Y1 (mm)
63	319.4	196.2	118.4	90	133.3	60	78.8	45	104	40		92.3	64.5	15
75	332.3	196.2	132.5	90	139.9	60	85.1	46	115	54	35	92.3	64.5	15
90	350.0	205.6	136.8	90	145.6	66	91.2	49	131	67	50	98.2	70.4	15
110	383.3	242.0	161.0	90	166.4	71	105.7	56	161	88	74	111.2	83.3	
140	410.0	242.0	187.0	90	180.0	78	118.8	64	187	113	97	111.2	83.3	
160	469.4	290.0	215.0	90	189.0	86	130.9	72	215	139	123	149.5	107.5	
225	518.3	290.0	267.0	90		96	158.3	73	267	178	169	149.5	107.5	

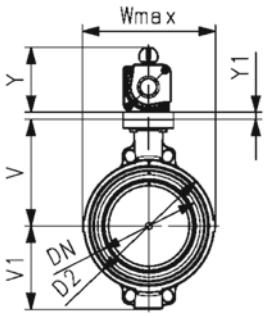

d (mm)	M2 (mm)
63	98.1
75	98.1
90	102.8
110	121.0
140	121.0
160	145.0
225	145.0

Butterfly valves pneumatic type 243

Lug-style end installation butterfly valve type 243 PVC-C
DA (Double acting)
Flange standard metric

Model:

- Overall length according to EN 558, ISO 5752 (DN50 - 200 line 25, DN250 - 300 line 10)
- Connecting dimension: ISO 7005 PN10, EN 1092 PN10, DIN 2501 PN10
- Control pressure supply through integrated NAMUR interface according VDI/VDE 3845 with 4.2 bar (60.9 psi)
- Control time 90°<) 1-2s
- For easy installation and removal
- Full plastic solution (actuator housing made of PP-GF)
- Visual position indicator

Option:

- Optional accessory: Valve-Integrated position feedback with limit switches (limit switches have to be ordered separately)
- Positioner RPC, RPC D, RPC PID
- Individual configuration of the valve

Note:

For some material combination (e.g. DN300 valves with PE/PP pipes) special flange adapters are needed. Please check the "Perfect flange connection tool" on www.gfps.com

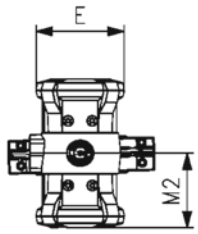

d (mm)	Size (inch)	DN (mm)	PN (bar)	EPDM Code	SP	Weight (kg)	FKM Code	SP	Weight (kg)
63	2	50	10	**199 243 752**	1	3.499	**199 243 762**	1	3.499
75	2 ½	65	10	**199 243 753**	1	3.656	**199 243 763**	1	3.656
90	3	80	10	**199 243 754**	1	4.692	**199 243 764**	1	4.692
110	4	100	10	**199 243 755**	1	6.406	**199 243 765**	1	6.406
140	5	125	10	**199 243 756**	1	9.222	**199 243 766**	1	9.222

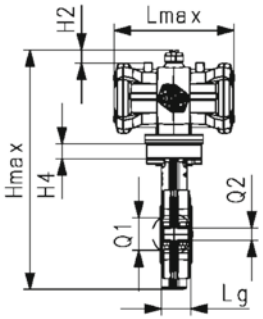

d (mm)	Hmax (mm)	Lmax (mm)	Wmax (mm)	U (mm)	V (mm)	H4 (mm)	V1 (mm)	Lg (mm)	D2 (mm)	Q1 (mm)	Q2 (mm)	d2	k (mm)	Y (mm)
63	338.1	183.5	165	90	133.3	23	78.8	44.7	160	40		M16	125	111
75	351.0	183.5	182	90	139.9	23	85.1	45.7	180	54	35	M16	145	111
90	362.8	183.5	210	90	145.6	23	91.2	48.7	195	67	50	M16	160	111
110	404.5	261.0	240	90	166.0	23	107.5	55.6	226	88	74	M16	180	131
140	433.7	261.0	272	90	180.0	23	122.7	63.5	258	113	97	M16	210	131

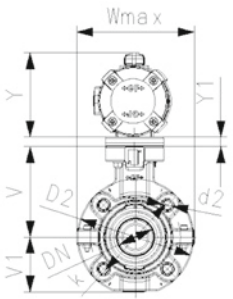

d (mm)	E (mm)	Y1 (mm)	M2 (mm)
63	119.5	15	91.75
75	119.5	15	91.75
90	119.5	15	91.75
110	141.5		130.50
140	141.5		130.50

Lug-style end installation butterfly valve type 243 PVC-C
FO (Fail safe to open)
Flange standard metric

Model:

- Overall length according to EN 558, ISO 5752 (DN50 - 200 line 25, DN250 - 300 line 10)
- Connecting dimension: ISO 7005 PN10, EN 1092 PN10, DIN 2501 PN10
- Control pressure supply through integrated NAMUR interface according VDI/VDE 3845 with 4.2 bar (60.9 psi)
- Control time 90°<) 1-2s
- For easy installation and removal
- Full plastic solution (actuator housing made of PP-GF)
- Visual position indicator

Option:

- Optional accessory: Valve-Integrated position feedback with limit switches (limit switches have to be ordered separately)
- Positioner RPC, RPC D, RPC PID
- Individual configuration of the valve

Note:

For some material combination (e.g. DN300 valves with PE/PP pipes) special flange adapters are needed. Please check the "Perfect flange connection tool" on www.gfps.com

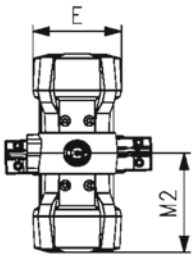

d (mm)	Size (inch)	DN (mm)	PN (bar)	EPDM Code	SP	Weight (kg)	FKM Code	SP	Weight (kg)
63	2	50	10	**199 243 732**	1	3.499	**199 243 742**	1	3.499
75	2 ½	65	10	**199 243 733**	1	3.656	**199 243 743**	1	3.656
90	3	80	10	**199 243 734**	1	4.692	**199 243 744**	1	4.692
110	4	100	10	**199 243 735**	1	6.406	**199 243 745**	1	6.406
140	5	125	10	**199 243 736**	1	9.222	**199 243 746**	1	9.222

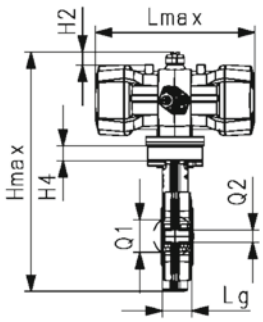

d (mm)	Hmax (mm)	Lmax (mm)	Wmax (mm)	U (mm)	V (mm)	H4 (mm)	V1 (mm)	Lg (mm)	D2 (mm)	Q1 (mm)	Q2 (mm)	d2	k (mm)	Y (mm)
63	338.1	245.5	165	90	133.3	23	78.8	44.7	160	40		M16	125	111
75	351.0	245.5	182	90	139.9	23	85.1	45.7	180	54	35	M16	145	111
90	367.8	343.0	210	90	145.6	23	91.2	48.7	195	67	50	M16	160	131
110	404.5	343.0	240	90	166.0	23	107.5	55.6	226	88	74	M16	180	131
140	433.7	343.0	272	90	180.0	23	122.7	63.5	258	113	97	M16	210	131

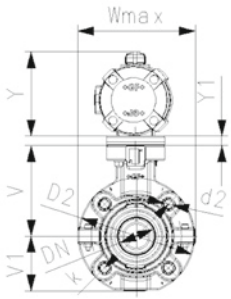

d (mm)	E (mm)	Y1 (mm)	M2 (mm)
63	119.5	15	122.75
75	119.5	15	122.75
90	141.5	15	171.50
110	141.5		171.50
140	141.5		171.50

Lug-style end installation butterfly valve type 243 PVC-C
FC (Fail safe to close)
Flange standard metric

Model:

- Overall length according to EN 558, ISO 5752 (DN50 - 200 line 25, DN250 - 300 line 10)
- Connecting dimension: ISO 7005 PN10, EN 1092 PN10, DIN 2501 PN10
- Control pressure supply through integrated NAMUR interface according VDI/VDE 3845 with 4.2 bar (60.9 psi)
- Control time 90°<) 1-2s
- For easy installation and removal
- Full plastic solution (actuator housing made of PP-GF)
- Visual position indicator

Option:

- Optional accessory: Valve-Integrated position feedback with limit switches (limit switches have to be ordered separately)
- Positioner RPC, RPC D, RPC PID
- Individual configuration of the valve

Note:

For some material combination (e.g. DN300 valves with PE/PP pipes) special flange adapters are needed. Please check the "Perfect flange connection tool" on www.gfps.com

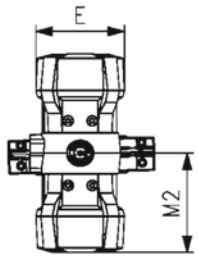

d (mm)	Size (inch)	DN (mm)	PN (bar)	EPDM Code	SP	Weight (kg)	FKM Code	SP	Weight (kg)
63	2	50	10	**199 243 712**	1	3.499	**199 243 722**	1	3.499
75	2 ½	65	10	**199 243 713**	1	3.656	**199 243 723**	1	3.656
90	3	80	10	**199 243 714**	1	4.692	**199 243 724**	1	4.692
110	4	100	10	**199 243 715**	1	6.406	**199 243 725**	1	6.406
140	5	125	10	**199 243 716**	1	9.222	**199 243 726**	1	9.222

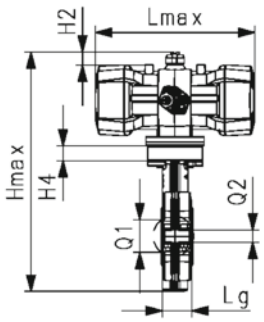

d (mm)	Hmax (mm)	Lmax (mm)	Wmax (mm)	U (mm)	V (mm)	H4 (mm)	V1 (mm)	Lg (mm)	D2 (mm)	Q1 (mm)	Q2 (mm)	d2	k (mm)	Y (mm)
63	338.1	245.5	165	90	133.3	23	78.8	44.7	160	40		M16	125	111
75	351.0	245.5	182	90	139.9	23	85.1	45.7	180	54	35	M16	145	111
90	367.8	343.0	210	90	145.6	23	91.2	48.7	195	67	50	M16	160	131
110	404.5	343.0	240	90	166.0	23	107.5	55.6	226	88	74	M16	180	131
140	433.7	343.0	272	90	180.0	23	122.7	63.5	258	113	97	M16	210	131

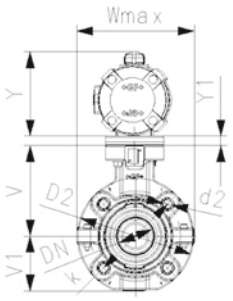

d (mm)	E (mm)	Y1 (mm)	M2 (mm)
63	119.5	15	122.75
75	119.5	15	122.75
90	141.5	15	171.50
110	141.5		171.50
140	141.5		171.50

Lug-style end installation butterfly valve type 243 PVC-C
With pneumatic actuator - fail safe to close(FC)
Without manual override
Flange standard metric

Model:

- Housing material: PP-GF30 with SS316 lug-inserts
- Control range 90°<)
- Overall length according to EN 558, ISO 5752 (DN50 - 200 line 25, DN250 - 300 line 10)
- Connecting dimension: ISO 7005 PN10, EN 1092 PN10, DIN 2501 PN10

Option:

- Optional accessory: Valve-Integrated position feedback with limit switches (limit switches have to be ordered separately)

Note:

For some material combination (e.g. DN300 valves with PE/PP pipes) special flange adapters are needed. Please check the "Perfect flange connection tool" on www.gfps.com

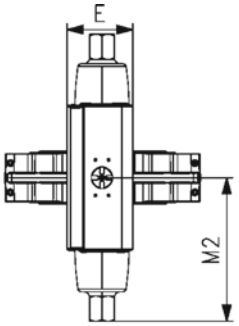

d (mm)	Size (inch)	DN (mm)	PN (bar)	kv-value (Δp=1 bar) (l/min)	EPDM Code	SP	Weight (kg)	FKM Code	SP	Weight (kg)
63	2	50	10	740	**199 243 162**	1	3.499	**199 243 182**	1	3.499
75	2 ½	65	10	1500	**199 243 163**	1	3.656	**199 243 183**	1	3.656
90	3	80	10	2400	**199 243 164**	1	4.692	**199 243 184**	1	4.692
110	4	100	10	3800	**199 243 165**	1	6.406	**199 243 185**	1	6.406
140	5	125	10	8600	**199 243 166**	1	9.222	**199 243 186**	1	9.222
160	6	150	10	11400	**199 243 167**	1	12.902	**199 243 187**	1	12.902
225	8	200	10	19900	**199 243 168**	1	16.691	**199 243 188**	1	16.691
280	10	250	10	34000	**199 243 169**	1	33.880	**199 243 189**	1	33.880
315	12	300	5	50000	**199 243 170**	1	43.985	**199 243 190**	1	43.985

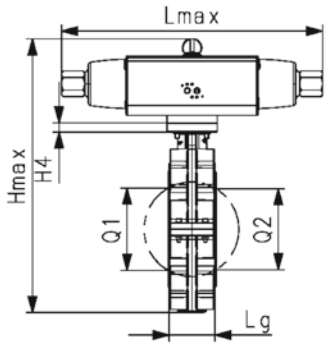

d (mm)	Hmax (mm)	Lmax (mm)	Wmax (mm)	U (mm)	V (mm)	H4 (mm)	V1 (mm)	Lg (mm)	D2 (mm)	Q1 (mm)	Q2 (mm)	d2	k (mm)	Y (mm)
63	328.1	274.4	165	90	133.3	23	78.8	44.7	160	40		M16	125	98.2
75	341.0	274.4	182	90	139.9	23	85.1	45.7	180	54	35	M16	145	98.2
90	365.7	325.2	210	90	145.6	23	91.2	48.7	195	67	50	M16	160	111.1
110	388.3	359.6	240	90	166.0	23	107.5	55.6	226	88	74	M16	180	114.8
140	452.2	418.0	272	90	180.0	23	122.7	63.5	258	113	97	M16	210	149.5
160	476.6	434.0	280	90	189.0	23	134.5	71.5	284	139	123	M20	240	153.1
225	532.0	498.4	360	90	210.5	23	161.5	72.5	341	178	169	M20	295	160.0
280	679.5	646.0	440	125	264.4	23	206.9	113.2	412	210	207	M20	350	190.0
315	749.0	681.0	510	125	285.2	23	235.5	114.6	482	256	253	M20	400	210.1

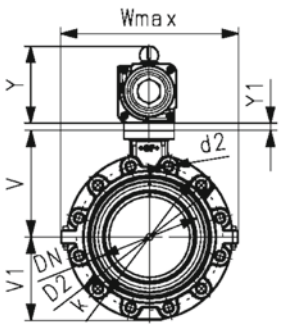

d (mm)	E (mm)	Y1 (mm)	M2 (mm)
63	70.4	15.0	137.2
75	70.4	15.0	137.2
90	83.3	15.0	162.6
110	87.0		179.8
140	107.5		209.0
160	111.1		217.0
225	118.0		249.2
280	148.0	18.2	323.0
315	168.0	18.2	340.5

Lug-style end installation butterfly valve type 243 PVC-C
With pneumatic actuator- fail safe to open (FO)
Without manual override
Flange standard metric

Model:

- Housing material: PP-GF30 with SS316 lug-inserts
- Control range 90°<)
- Overall length according to EN 558, ISO 5752 (DN50 - 200 line 25, DN250 - 300 line 10)
- Connecting dimension: ISO 7005 PN10, EN 1092 PN10, DIN 2501 PN10

Option:

- Optional accessory: Valve-Integrated position feedback with limit switches (limit switches have to be ordered separately)

Note:

For some material combination (e.g. DN300 valves with PE/PP pipes) special flange adapters are needed. Please check the "Perfect flange connection tool" on www.gfps.com

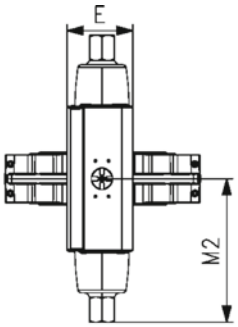

d (mm)	Size (inch)	DN (mm)	PN (bar)	kv-value (Δp=1 bar) (l/min)	EPDM Code	SP	Weight (kg)	FKM Code	SP	Weight (kg)
63	2	50	10	740	**199 243 202**	1	3.499	**199 243 222**	1	3.499
75	2 ½	65	10	1500	**199 243 203**	1	3.656	**199 243 223**	1	3.656
90	3	80	10	2400	**199 243 204**	1	4.692	**199 243 224**	1	4.692
110	4	100	10	3800	**199 243 205**	1	6.406	**199 243 225**	1	6.406
140	5	125	10	8600	**199 243 206**	1	9.222	**199 243 226**	1	9.222
160	6	150	10	11400	**199 243 207**	1	12.902	**199 243 227**	1	12.902
225	8	200	10	19900	**199 243 208**	1	16.691	**199 243 228**	1	16.691
280	10	250	10	34000	**199 243 209**	1	33.880	**199 243 229**	1	33.880
315	12	300	5	50000	**199 243 210**	1	43.985	**199 243 230**	1	43.985

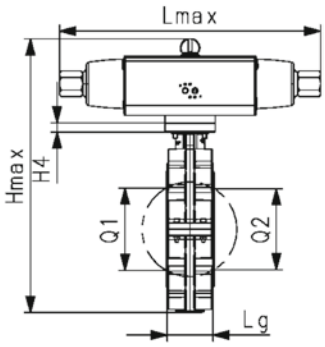

d (mm)	Hmax (mm)	Lmax (mm)	Wmax (mm)	U (mm)	V (mm)	H4 (mm)	V1 (mm)	Lg (mm)	D2 (mm)	Q1 (mm)	Q2 (mm)	d2	k (mm)	Y (mm)
63	328.1	274.4	165	90	133.3	23	78.8	44.7	160	40		M16	125	98.2
75	341.0	274.4	182	90	139.9	23	85.1	45.7	180	54	35	M16	145	98.2
90	365.7	325.2	210	90	145.6	23	91.2	48.7	195	67	50	M16	160	111.1
110	388.3	359.6	240	90	166.0	23	107.5	55.6	226	88	74	M16	180	114.8
140	452.2	418.0	272	90	180.0	23	122.7	63.5	258	113	97	M16	210	149.5
160	476.6	434.0	280	90	189.0	23	134.5	71.5	284	139	123	M20	240	153.1
225	532.0	498.4	360	90	210.5	23	161.5	72.5	341	178	169	M20	295	160.0
280	679.5	646.0	440	125	264.4	23	206.9	113.2	412	210	207	M20	350	190.0
315	749.0	681.0	510	125	285.2	23	235.5	114.6	482	256	253	M20	400	210.1

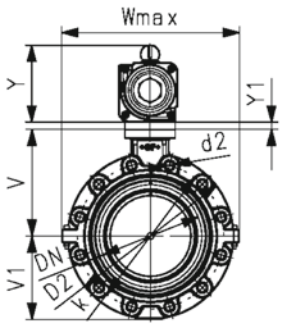

d (mm)	E (mm)	Y1 (mm)	M2 (mm)
63	70.4	15.0	137.2
75	70.4	15.0	137.2
90	83.3	15.0	162.6
110	87.0		179.8
140	107.5		209.0
160	111.1		217.0
225	118.0		249.2
280	148.0	18.2	323.0
315	168.0	18.2	340.5

Lug-style end installation butterfly valve type 243 PVC-C
With pneumatic actuator - double acting (DA)
Without manual override
Flange standard metric

Model:

- Housing material: PP-GF30 with SS316 lug-inserts
- Control range 90°<)
- Overall length according to EN 558, ISO 5752 (DN50 - 200 line 25, DN250 - 300 line 10)
- Connecting dimension: ISO 7005 PN10, EN 1092 PN10, DIN 2501 PN10

Option:

- Optional accessory: Valve-Integrated position feedback with limit switches (limit switches have to be ordered separately)

Note:

For some material combination (e.g. DN300 valves with PE/PP pipes) special flange adapters are needed. Please check the "Perfect flange connection tool" on www.gfps.com

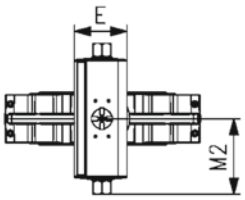

d (mm)	Size (inch)	DN (mm)	PN (bar)	kv-value (Δp=1 bar) (l/min)	EPDM Code	SP	Weight (kg)	FKM Code	SP	Weight (kg)
63	2	50	10	740	**199 243 242**	1	3.499	**199 243 262**	1	3.499
75	2 ½	65	10	1500	**199 243 243**	1	3.656	**199 243 263**	1	3.656
90	3	80	10	2400	**199 243 244**	1	4.692	**199 243 264**	1	4.692
110	4	100	10	3800	**199 243 245**	1	6.406	**199 243 265**	1	6.406
140	5	125	10	8600	**199 243 246**	1	9.222	**199 243 266**	1	9.222
160	6	150	10	11400	**199 243 247**	1	12.902	**199 243 267**	1	12.902
225	8	200	10	19900	**199 243 248**	1	16.691	**199 243 268**	1	16.691
280	10	250	10	34000	**199 243 249**	1	33.880	**199 243 269**	1	33.880
315	12	300	5	50000	**199 243 250**	1	43.985	**199 243 270**	1	43.985

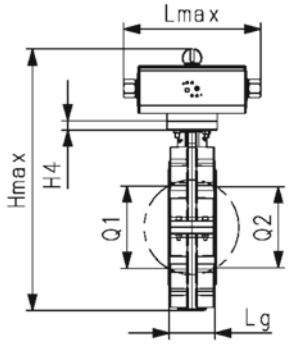

d (mm)	Hmax (mm)	Lmax (mm)	Wmax (mm)	U (mm)	V (mm)	H4 (mm)	V1 (mm)	Lg (mm)	D2 (mm)	Q1 (mm)	Q2 (mm)	d2	k (mm)	Y (mm)
63	319.4	196.2	165	90	133.3	23	78.8	44.7	160	40		M16	125	92.3
75	332.3	196.2	182	90	139.9	23	85.1	45.7	180	54	35	M16	145	92.3
90	352.8	205.6	210	90	145.6	23	91.2	48.7	195	67	50	M16	160	98.2
110	384.7	242.0	240	90	166.0	23	107.5	55.6	226	88	74	M16	180	111.2
140	413.9	242.0	272	90	180.0	23	122.7	63.5	258	113	97	M16	210	111.2
160	473.0	290.0	280	90	189.0	23	134.5	71.5	284	139	123	M20	240	149.5
225	521.5	290.0	360	90	210.5	23	161.5	72.5	341	178	169	M20	295	149.5
280	649.5	339.6	440	125	264.4	23	206.9	113.2	412	210	207	M20	350	160.0
315	698.9	339.6	510	125	285.2	23	235.5	114.6	482	256	253	M20	400	160.0

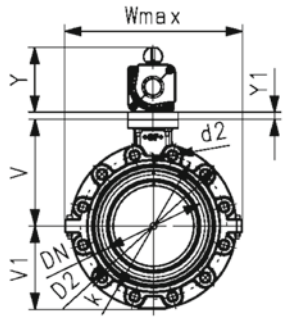

d (mm)	E (mm)	Y1 (mm)	M2 (mm)
63	64.5	15.0	98.1
75	64.5	15.0	98.1
90	70.4	15.0	102.8
110	83.3		121.0
140	83.3		121.0
160	107.5		145.0
225	107.5		145.0
280	118.0	18.2	169.8
315	118.0	18.2	169.8

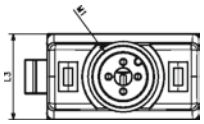

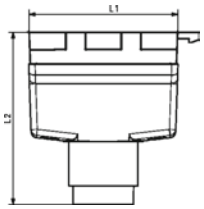

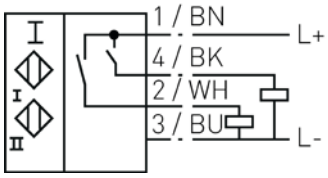

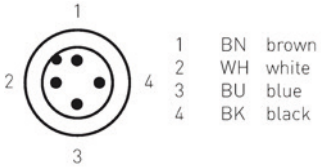

Double sensor for electrical position feedback
For double sensor (Ball valve 546 Pro, 543 Pro and Butterfly Valve 565/567/578)

Model:

- Accessory for Ball Valve type 546 Pro, 543 Pro and Butterfly Valve 565/567/578
- Enables electrical position feedback, incl. LED, in combination with GF interface module
- IP67 rating
- Female connector and cables available – see 198546150 – 154
- NAMUR version has ATEX and IECEx certification
- Dimensions: Ball Valves 546 Pro and 543 Pro DN10-100, Butterfly Valve 565 DN50-300, Butterfly Valve 567/578 DN50-200 and DN350-600

Specifications:
Housing material: PBTGF20
Switching function: 2x normally open (NO)
Output type: PNP or NPN
Output polarity: DC
Output type: 3-wire
Operating voltage (U_B): 10... 30V DC
Reverse polarity protection: all connections
Voltage drop (U_d): ≤3V
Operating current (L_L): 0... 150mA
Off-state current (L_r): 0... 0.5mA typ. 0.1 µA at 25°C
No-load supply current (L_0): ≤25mA
Ambient temperature: -25...70°C (-13...158°F)
Connection (system side): 4-pin, M12 x 1 connector
Standards: EN 60947-5-2:2007, EN 60947-5-2/A1:2012 IEC 60947-5-2:2007, IEC 60947-5-2 AMD 1:2012
$MTTF_d$ 948 a

Note:
*NAMUR sensor does not work with 565
For manually operated valves an additional switching ring (article number 199565900-199565003) is required. For electric or pneumatic operated valves, the switching ring is already pre-assembled.

LED Signal Colour	PNP Code	SP	Weight (kg)	NPN Code	*Namur (Atex) Code	L1 (mm)	L2 (mm)	L3 (mm)	M1
Closed: green / open: red	**198 546 001**	1	0.050	**198 546 005**	**198 546 003**	26	30	15	M12
Closed: red / open: green	**198 546 002**	1	0.050	**198 546 006**	**198 546 004**	26	30	15	M12

Specifications	PNP/NPN	NAMUR
Technology	Inductive	Inductive
Output circuit	PNP, NPN 2x NO contact	NAMUR 2x NC contact
Hysteresis	Typical 5%	Typical 10%
Switching frequency	<500 Hz	<1000 Hz
Switching status display	Output 1 / 2	Output 1 / 2
Art. Nr. 198546001 PNP	LED red / green	
Art. Nr. 198546002 PNP	LED green / red	
Art. Nr. 198546005 NPN	LED red / green	
Art. Nr. 198546006 NPN	LED green / red	
Art. Nr. 198546003 NAMUR		LED green / red
Art. Nr. 198546004 NAMUR		LED red / green
Supply voltage range +Vs	10...30V DC	8.2 V
Operating current	0...150 mA	
Voltage drop (Ud)	≤3V	
Off-state current (Ir)	0... 0.5mA typ. 0.1 µA bei 25°C	
No-load supply current (I0)	≤ 25 mA	≥ 3 mA
MTTFd	780 a	2122 a
Short-circuit proof	yes	
Reverse polarity protected	yes	
Protection class	IP67	
Housing material	PBTGF20	
Operating temperature	-25...70 °C (-13...158°F)	
Connection	4-pin, M12x1	
NAMUR version Approvals/certificates	Safety integrity level: SIL 2 IECEx TUR 20.0002X (Ga, Gb, Mb) TÜV 19 ATEX 8467 X(Ga, Gb)	

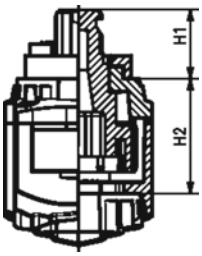

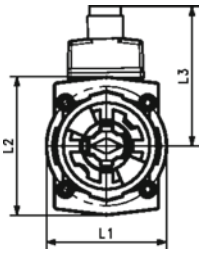

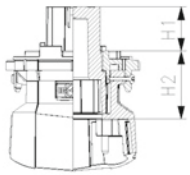

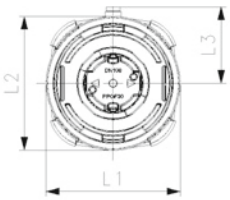

Manual Interface module
For Ball Valve Type 546 Pro & 543 Pro

Model:

- Accessory for manual ball valve type 546 Pro and 543 Pro
- Position feedback through double sensor with LED (PNP, NPN and NAMUR) possible
- Inclusive labelling clip

Ball Valve 543 Pro requires an additional spacer ring (DN10-15: 198543000, DN20-25: 198543001, DN32-40: 198543002, DN50: 198543003)

DN (mm)	d (mm)	Manual Interface Code	SP	Weight (kg)	H1 (mm)	H2 (mm)	L1 (mm)	L2 (mm)	L3 (mm)
10 - 15	16 - 20	**198 546 102**	1	0.042	15	32	37	44	46
20 - 25	25 - 32	**198 546 103**	1	0.052	20	32	41	47	48
32 - 40	40 - 50	**198 546 105**	1	0.097	23	33	53	60	54
50	63	**198 546 107**	1	0.111	26	36	56	62	55
65 - 80	75 - 90	**198 546 108**	1	0.111	34	52	103	103	58
100	110	**198 546 109**	1	0.111	34	52	103	103	58

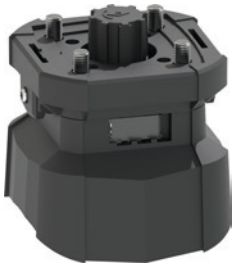

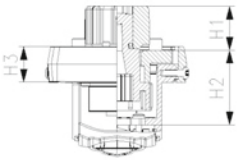

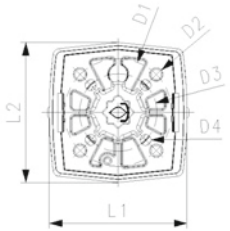

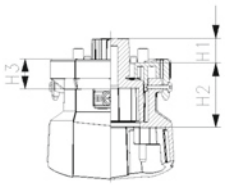

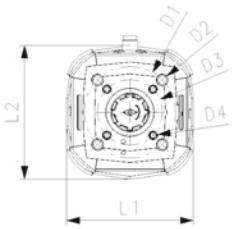

Interface module for GF actuators
For Ball Valve Type 546 Pro and 543 Pro

Model:

- Interface module acts as interface between GF actuators and ball valves
- Position feedback through double sensor with LED (PNP, NPN and NAMUR) possible
- Inclusive labelling clip

Ball Valve 543 Pro requires an additional spacer ring (DN10-15: 198543000, DN20-25: 198543001, DN32-40: 198543002, DN50: 198543003)

	DN (mm)	d (mm)	Interface for PPA Code	SP	Weight (kg)	Interface for EA Code	SP	Weight (kg)
	10 - 15	16 - 20	**198 546 162**	1	0.130	**198 546 142**	1	0.100
	20	25	**198 546 163**	1	0.105	**198 546 143**	1	0.100
	25	32	**198 546 164**	1	0.105	**198 546 144**	1	0.105
	32	40	**198 546 135**	1	0.001	**198 546 145**	1	0.140
	40	50	**198 546 136**	1	0.001	**198 546 146**	1	0.140
	50	63	**198 546 137**	1	0.001	**198 546 147**	1	0.140
if PPA40	65 - 80	75 - 90	**198 546 165**	1	0.001	**198 546 148**	1	0.140
if PPA80	65 - 80	75 - 90	**198 546 166**	1	0.135			
	100	110	**198 546 167**	1	0.001	**198 546 149**	1	0.140

	DN (mm)	H1 (mm)	H2 (mm)	H3 (mm)	L1 (mm)	L2 (mm)	D1 (mm)	D2	D3 (mm)	D4
	10 - 15	16	35	17	65	65	50	M6	36	M5
	20	16	35	17	65	65	50	M6	36	M5
	25	16	35	17	65	65	50	M6	36	M5
	32	18	33	15	72	79	50	M6		
	40	18	33	15	72	79	50	M6		
	50	18	36	15	72	79	50	M6		
if PPA40	65 - 80	19	49	23	92	91	70	M8	50	M6
if PPA80	65 - 80	19	49	23	92	91	70	M8	50	M6
	100	18	49	23	97	103	70	M8	50	M6

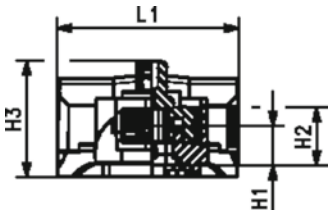

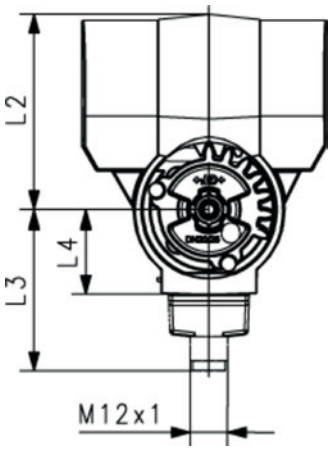

Manual spring return unit for ball valves 546 Pro and 543 Pro
Retrofit kit

Model:

- Manual spring return unit ("Dead-man lever") ensures that the valve closes after operation
- For safe sampling, dosing, cleaning or draining
- Retrofit possible with ball valve 546 (Pro)
- Includes transparent clip for valve labelling

Option:

- Double sensor for position feedback

Note:

*optional accessory to use a bigger lever for higher operating torque

d (mm)	DN (mm)	Code
16 - 20	10 - 15	**198 546 082**
25 - 32	20 - 25	**198 546 083**

Adapter for bigger lever*	Bigger size lever*	L1 (mm)	L2 (mm)	L3 (mm)	L4 (mm)	H1 (mm)	H2 (mm)	H3 (mm)
198546088	167484549 (DN20)	74	42.5	46.0	22	11.0	20.0	42.5
198546089	167484551 (DN32)	79	63.0	51.5	27	17.5	25.5	50.5

Female connector
For double sensor (Ball valve 546 Pro and Butterfly Valve 565)

Model:

- Accessory for Ball Valve type 546 Pro and Butterfly Valve 565
- Connects double sensor to PLC
- Cable is flame-resistant
- Degree of protection IP67 / IP68 / IP69K

Note:

Degree of protection: EN60529:2000
Standards: IEC 61076-2-101:2008
Ambient temperature:
- Body: -40 ... 90 °C (-40 ... 194 °F)
- cable, fixed: -25 ... 70 °C (-13 ... 158 °F)
- cable, flexing: -5 ... 70 °C (23 ... 158 °F)
Pollution degree: 3

Code	Model
198 546 150	Connector without cable
198 546 151	Connector with cable (5m PVC)
198 546 152	Connector with cable (10m PVC)
198 546 153	Connector with cable (5m PUR)
198 546 154	Connector with cable (10m PUR)

Diaphragm valves type 317

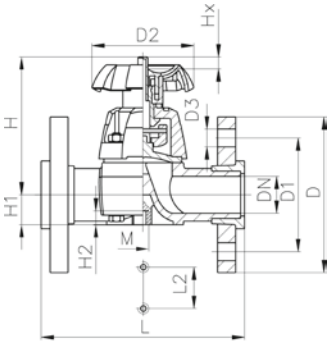

DN 15–65

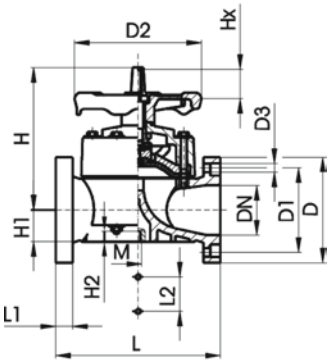

DN 80-100

Diaphragm valve type 317 PVC-C
With flanges PP-V metric

Model:

- Flat sealing faces
- DN65 with backing flange
- DN 80-150 with fixed flange
- Overall length according to EN 558

Option:

- Handwheel lockable DN15-65 (basic version not lockable)

*** DN80, DN100 and DN150 fixed flanges metric and inch ANSI B16.5**

	d (mm)	Size (inch)	DN (mm)	PN (bar)	kv-value (Δp=1 bar) (l/min)	EPDM Code	PTFE/EPDM Code	SP	Weight (kg)
	75	2 ½	65	10	992	**163 317 523**	**163 317 538**	1	4.425
*	90	3	80	10	1700	**163 317 024**	**163 317 039**	1	9.822
*	110	4	100	6	2700	**163 317 025**	**163 317 040**	1	13.799

	d (mm)	D (mm)	D1 (mm)	D2 (mm)	D3 (mm)	H (mm)	H1 (mm)	H2 (mm)	L (mm)	L1 (mm)	L2 (mm)	M	Lift = Hx (mm)	AL
	75	185	145	152	18	201	46	15	290		70	M8	30	4
*	90	200	160	270	18	265	57	23	310	35	120	M12	40	8
*	110	225	180	270	18	304	69	23	350	35	120	M12	50	8

Diaphragm valves type 514

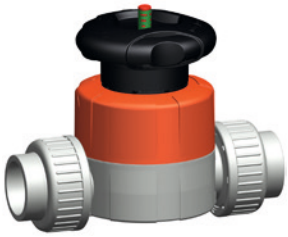

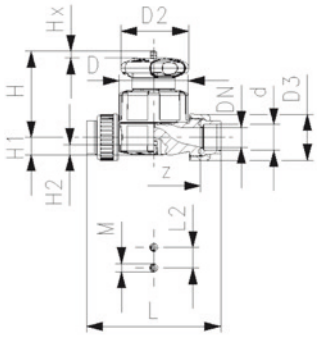

Diaphragm valve type 514 PVC-C
With solvent cement sockets metric

Model:

- Double flow rate compared to predecessor
- One housing nut replaces four screws
- Handwheel with built-in locking mechanism
- For easy installation and removal
- Short overall length

Option:

- Individual configuration of the valve
- Self adjusting multifunctional module with integrated limit switches

* O-Ring material: FKM

d (mm)	DN (mm)	Size (inch)	PN (bar)	kv-value (Δp=1 bar) (l/min)	EPDM Code	SP	Weight (kg)	PTFE/ EPDM* Code	SP	Weight (kg)
20	15	½	10	125	**163 514 012**	1	0.409	**163 514 032**	1	0.312
25	20	¾	10	271	**163 514 013**	1	0.448	**163 514 033**	1	0.558
32	25	1	10	481	**163 514 014**	1	0.707	**163 514 034**	1	1.207
40	32	1 ¼	10	759	**163 514 015**	1	1.516	**163 514 035**	1	1.536
50	40	1 ½	10	1263	**163 514 016**	1	1.674	**163 514 036**	1	1.541
63	50	2	10	1728	**163 514 017**	1	2.568	**163 514 037**	1	3.622

d (mm)	D (mm)	D2 (mm)	D3 (mm)	H (mm)	H1 (mm)	H2 (mm)	L (mm)	L2 (mm)	M	z (mm)	Lift = Hx (mm)	closest inch (inch)
20	65	65	43	73	14	12	128	25	M6	96	7	½
25	80	65	51	81	18	12	152	25	M6	114	10	¾
32	88	87	58	107	22	12	166	25	M6	122	13	1
40	101	87	72	115	26	15	192	45	M8	140	15	1 ¼
50	117	135	83	148	32	15	222	45	M8	160	19	1 ½
63	144	135	100	166	39	15	266	45	M8	190	25	2

Diaphragm valves type 515

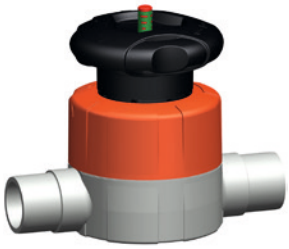

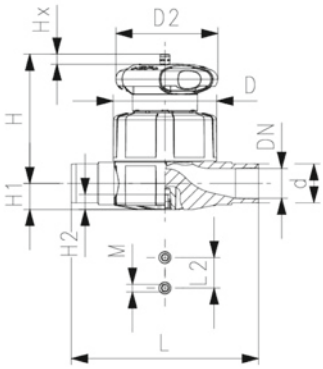

Diaphragm valve type 515 PVC-C
With solvent cement spigots metric

Model:

- Double flow rate compared to predecessor
- One housing nut replaces four screws
- Handwheel with built-in locking mechanism
- Overall length EN 558

Option:

- Individual configuration of the valve
- Self adjusting multifunctional module with integrated limit switches

* O-Ring material: FKM

d (mm)	DN (mm)	Size (inch)	PN (bar)	kv-value (Δp=1 bar) (l/min)	EPDM Code	SP	Weight (kg)	PTFE/ EPDM* Code	SP	Weight (kg)
20	15	½	10	125	**163 515 012**	1	0.344	**163 515 032**	1	0.344
25	20	¾	10	271	**163 515 013**	1	0.361	**163 515 033**	1	0.364
32	25	1	10	481	**163 515 014**	1	0.589	**163 515 034**	1	1.073
40	32	1 ¼	10	759	**163 515 015**	1	1.269	**163 515 035**	1	1.290
50	40	1 ½	10	1263	**163 515 016**	1	2.314	**163 515 036**	1	2.343
63	50	2	10	1728	**163 515 017**	1	3.054	**163 515 037**	1	3.082

d (mm)	D (mm)	D2 (mm)	H (mm)	H1 (mm)	H2 (mm)	L (mm)	L2 (mm)	M	Lift = Hx (mm)	closest inch (inch)
20	65	65	73	14	12	124	25	M6	7	½
25	80	65	81	18	12	144	25	M6	10	¾
32	88	87	107	22	12	154	25	M6	13	1
40	101	87	115	26	15	174	45	M8	15	1 ¼
50	117	135	148	32	15	194	45	M8	19	1 ½
63	144	135	166	39	15	224	45	M8	25	2

Diaphragm valves type 517

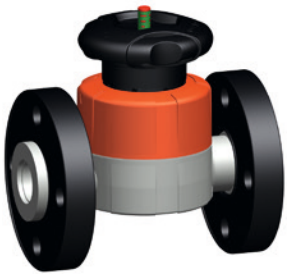

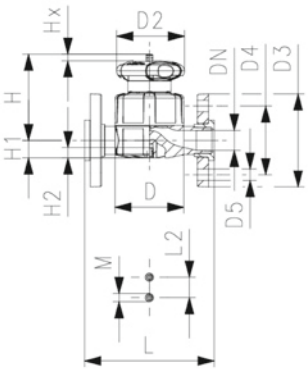

Diaphragm valve type 517 PVC-C
With backing flanges PP-V metric/BS

Model:

- Double flow rate compared to predecessor
- One housing nut replaces four screws
- Handwheel with built-in locking mechanism
- Flat sealing faces
- Overall length EN 558
- Connecting dimension: ISO 7005 PN 10, EN 1092 PN 10, DIN 2501 PN 10, BS 4504 PN 10

Option:

- Individual configuration of the valve
- Self adjusting multifunctional module with integrated limit switches

* O-Ring material: FKM

d (mm)	DN (mm)	Size (inch)	PN (bar)	kv-value (Δp=1 bar) (l/min)	EPDM Code	SP	Weight (kg)	PTFE/ EPDM* Code	SP	Weight (kg)
20	15	½	10	125	**163 517 112**	1	0.447	**163 517 132**	1	0.529
25	20	¾	10	271	**163 517 113**	1	0.696	**163 517 133**	1	0.696
32	25	1	10	481	**163 517 114**	1	1.388	**163 517 134**	1	0.952
40	32	1 ¼	10	759	**163 517 115**	1	1.797	**163 517 135**	1	1.818
50	40	1 ½	10	1263	**163 517 116**	1	2.854	**163 517 136**	1	2.142
63	50	2	10	1728	**163 517 117**	1	3.318	**163 517 137**	1	3.115

d (mm)	D (mm)	D2 (mm)	D3 (mm)	D4 (mm)	D5 (mm)	H (mm)	H1 (mm)	H2 (mm)	L (mm)	L2 (mm)	M	Lift = Hx (mm)	closest inch (inch)
20	65	65	95	65	14	73	14	12	130	25	M6	7	½
25	80	65	105	75	14	81	18	12	150	25	M6	10	¾
32	88	87	115	85	14	107	22	12	160	25	M6	13	1
40	101	87	140	100	18	115	26	15	180	45	M8	15	1 ¼
50	117	135	150	110	18	148	32	15	200	45	M8	19	1 ½
63	144	135	165	125	18	166	39	15	230	45	M8	25	2

Copiable
Configurator GF Diaphragm Valve

Valve body type
A20 Type 514 - True Union Design
A21 Type 515 - Spigots
A22 Type 517 - Flanges

Material
B01 PVC-U
B02 PVC-C
B03 ABS

Dimension
C05 DN 10 3/8"
C06 DN 15 1/2"
C07 DN 20 3/4"
C08 DN 25 1"
C09 DN 32 1 1/4"
C10 DN 40 1 1/2"
C11 DN 50 2"

Version
D11 standard
D05 silicone free / oil free

Diaphragm
E01 EPDM
E02 FPM
E11 NBR
E12 PTFE/EPDM
E04 PTFE/FPM

Connecting parts

H01	PVC-U Cemented socket metric
H02	PVC-U Cemented socket JIS
H03	PVC-U Cemented socket ASTM
H04	PVC-U Cemented socket Zoll BS
H05	PVC-U Cemented spigot metric
H06	PVC-U Threaded socket Rp (ISO)
H08	PVC-U Threaded socket Rc (JIS)
H09	PVC-U Threaded socket NPT (ASTM)
H11	PVC-C Cemented socket metric
H13	PVC-C Cemented socket Zoll ASTM
H14	PVC-C Cemented spigot metric
H20	ABS Cemented socket metric
H21	ABS Cemented socket Zoll BS
H24	ABS Cemented spigot metric
H40	PE-80 Fusion socket metric
H41	PE-100 Butt fusion spigot SDR11 metric
H43	PE-100 Butt fusion spigto long SDR11 metric
H62	Fixed flange PVC-U JIS
H70	Backing flange PVC-U metric with PVC-U endings
H71	Backing flange PVC-U Zoll ANSI with PVC-U endings
H71 PVCC	Backing flange PVC-U Zoll ANSI with PVC-C endings
H72 PVCU	Backing flange PP-steel metric with PVC-U endings
H72 PVCC	Backing flange PP-steel metric with PVC-C endings
H72 ABS	Backing flange PP-steel metric with ABS endings
H73 PVCU	Backing flange PP-steel Zoll ANSI with PVC-U endings
H73 PVCC	Backing flange PP-steel Zoll ANSI with PVC-C endings
H73 ABS	Backing flange PP-steel Zoll ANSI with ABS endings
H74 PVCU	Backing flange PP-V metric with PVC-U endings
H74 PVCC	Backing flange PP-V metric with PVC-C endings
H74 ABS	Backing flange PP-V metric with ABS endings
H74 PVCC	Backing flange PP-V metric with PVC-C endings
H75 PVCU	Backing flange PP-V ANSI with PVC-U endings
H75 PVCC	Backing flange PP-V ANSI with PVC-C endings
H78 PVCU	Backing flange PP-GF JIS with PVC-U endings
H80	PVC-U valve end blank

Electrical feedback
I33 Electrical feedback with Ag, Ni limit switches
I34 Electrical feedback with Au limit switches

Manual actuated: pressure tight housing
K30 Bonnet pressure tight
K31 Bonnet not pressure tight

Pressure range
M01 PN10
M02 PN16

Pneumatic Actuator DIASTAR
P40 DIASTAR Six FC fail safe to close
P43 DIASTAR Ten FC fail safe to close
P44 DIASTAR Sixteen FC fail safe to close
P45 DIASTAR Sixteen FO fail safe to open
P46 DIASTAR Sixteen DA double acting
P47 DIASTAR Ten FO fail safe to open
P48 DIASTAR Ten DA double acting

Example:
Diaphragm valve with valve body type 515, PVC-U, EPDM diaphragm, DN25, cemented spigots metric, electrical feedback, pressure tight housing, PN10

A21 B01 C08 D11 E01 H05 I33 K30 M01

P =

+GF+

Diaphragm valves pneumatic DIASTAR Six

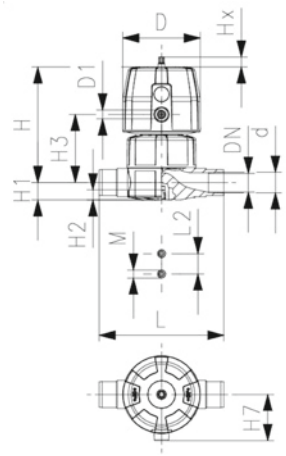

Diaphragm valve DIASTAR Six PVC-C
FC (Fail safe to close)
With solvent cement spigots metric

Model:

- Double flow rate compared to predecessor
- One housing nut replaces four screws
- Rotating air connection at 90° intervals
- Overall length EN 558

Option:

- Individual configuration of the valve

d (mm)	DN (mm)	Size (inch)	PN (bar)	kv-value (Δp=1 bar) (l/min)	EPDM Code	SP	Weight (kg)
25	20	¾	6	271	**163 615 013**	1	0.979
32	25	1	6	481	**163 615 014**	1	1.166
40	32	1 ¼	6	759	**163 615 015**	1	1.908
50	40	1 ½	6	960	**163 615 016**	1	2.464
63	50	2	6	1181	**163 615 017**	1	3.431

d (mm)	D (mm)	D1_G (inch)	H (mm)	H1 (mm)	H2 (mm)	H3 (mm)	H7 (mm)	L (mm)	L2 (mm)	M	Lift = Hx (mm)	closest inch (inch)
25	96	⅛	132	18	12	73	57	144	25	M6	10	¾
32	96	⅛	143	22	12	84	57	154	25	M6	13	1
40	120	⅛	173	26	15	99	69	174	45	M8	14	1 ¼
50	120	⅛	193	32	15	119	69	194	45	M8	16	1 ½
63	120	⅛	205	39	15	132	69	224	45	M8	16	2

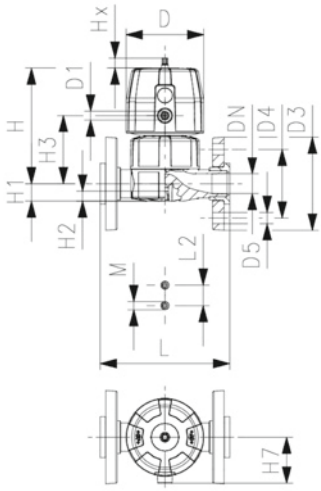

Diaphragm valve DIASTAR Six PVC-C
FC (Fail safe to close)
With backing flanges PP-V metric/BS

Model:

- Double flow rate compared to predecessor
- One housing nut replaces four screws
- Rotating air connection at 90° intervals
- Flat sealing faces
- Overall length EN 558
- Connecting dimension: ISO 7005 PN 10, EN 1092 PN 10, DIN 2501 PN 10, BS 4504 PN 10

Option:

- Individual configuration of the valve

d (mm)	DN (mm)	Size (inch)	PN (bar)	kv-value (Δp=1 bar) (l/min)	EPDM Code	SP	Weight (kg)
25	20	¾	6	271	**163 617 113**	1	1.215
32	25	1	6	481	**163 617 114**	1	1.502
40	32	1 ¼	6	759	**163 617 115**	1	2.436
50	40	1 ½	6	960	**163 617 116**	1	3.004
63	50	2	6	1181	**163 617 117**	1	4.399

table continued on the next page

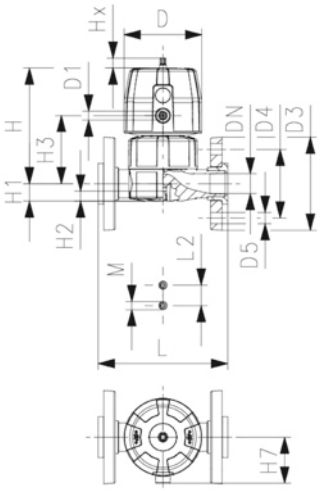

d (mm)	D (mm)	D1_G (inch)	D3 (mm)	D4 (mm)	D5 (mm)	H (mm)	H1 (mm)	H2 (mm)	H3 (mm)	H7 (mm)	L (mm)	L2 (mm)	M	Lift = Hx (mm)
25	96	⅛	105	75	14	132	18	12	73	57	150	25	M6	10
32	96	⅛	115	85	14	143	22	12	84	57	160	25	M6	13
40	120	⅛	140	100	18	173	26	15	99	69	180	45	M8	14
50	120	⅛	150	110	18	193	32	15	119	69	200	45	M8	16
63	120	⅛	165	125	18	205	39	15	132	69	230	45	M8	16

d (mm)	closest inch (inch)
25	¾
32	1
40	1 ¼
50	1 ½
63	2

Diaphragm valve DIASTAR Six PVC-C
FC (Fail safe to close)
Unions with solvent cement sockets metric

Model:

- Double flow rate compared to predecessor
- One housing nut replaces four screws
- Rotating air connection at 90° intervals
- For easy installation and removal
- Short overall length

Option:

- Individual configuration of the valve

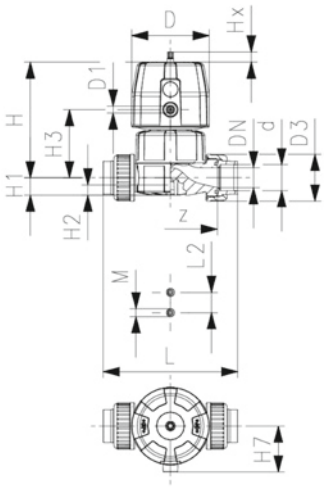

d (mm)	DN (mm)	Size (inch)	PN (bar)	kv-value (Δp=1 bar) (l/min)	EPDM Code	SP	Weight (kg)
25	20	¾	6	271	**163 614 013**	1	1.067
32	25	1	6	481	**163 614 014**	1	1.302
40	32	1 ¼	6	759	**163 614 015**	1	2.152
50	40	1 ½	6	960	**163 614 016**	1	2.795
63	50	2	6	1181	**163 614 017**	1	3.972

d (mm)	D (mm)	D1_G (inch)	H (mm)	H1 (mm)	H2 (mm)	H3 (mm)	H7 (mm)	L (mm)	L2 (mm)	M	z (mm)	Lift = Hx (mm)	closest inch (inch)
25	96	⅛	132	18	12	73	57	152	25	M6	114	10	¾
32	96	⅛	143	22	12	84	57	166	25	M6	122	13	1
40	120	⅛	173	26	15	99	69	192	45	M8	140	14	1 ¼
50	120	⅛	193	32	15	119	69	222	45	M8	160	16	1 ½
63	120	⅛	205	39	15	132	69	266	45	M8	190	16	2

Diaphragm valves pneumatic DIASTAR Ten

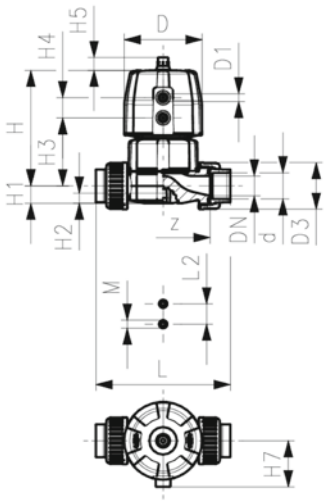

Diaphragm valve DIASTAR Ten PVC-C
FO (Fail safe to open)
Unions with solvent cement sockets metric

Model:

- Double flow rate compared to predecessor
- One housing nut replaces four screws
- Rotating air connection at 90° intervals
- For easy installation and removal
- Short overall length

Option:

- Individual configuration of the valve
- Comprehensive range of accessories available

* PN: PTFE
Working Pressure: **one side**
* O-Ring material: FKM

d (mm)	DN (mm)	Size (inch)	PN (bar)	PN* (bar)	kv-value (Δp=1 bar) (l/min)	EPDM Code	SP	Weight (kg)
20	15	½	10	10*	125	**163 644 012**	1	0.554
25	20	¾	10	10*	271	**163 644 013**	1	0.968
32	25	1	10	10*	481	**163 644 014**	1	1.194
40	32	1 ¼	10	10*	759	**163 644 015**	1	1.945
50	40	1 ½	10	10*	1263	**163 644 016**	1	3.326
63	50	2	10	10*	1728	**163 644 017**	1	4.011

d (mm)	PTFE/ EPDM* Code	SP	Weight (kg)
20	**163 644 032**	1	0.562
25	**163 644 033**	1	0.979
32	**163 644 034**	1	1.213
40	**163 644 035**	1	1.965
50	**163 644 036**	1	3.870
63	**163 644 037**	1	4.830

d (mm)	D (mm)	D1_G (inch)	H (mm)	H1 (mm)	H2 (mm)	H3 (mm)	H4 (mm)	H5 (mm)	H7 (mm)	L (mm)	L2 (mm)	M	z (mm)	Lift = Hx (mm)
20	68	⅛	101	14	12	60	24	16	43	128	25	M6	96	7
25	96	⅛	132	18	12	73	25	16	57	152	25	M6	114	10
32	96	⅛	143	22	12	84	25	16	57	166	25	M6	122	13
40	120	⅛	173	26	15	99	26	26	69	192	45	M8	140	15
50	150	¼	214	32	15	119	36	26	88	222	45	M8	160	19
63	150	¼	226	39	15	132	36	26	88	266	45	M8	190	23

d (mm)	closest inch (inch)
20	½
25	¾
32	1
40	1 ¼
50	1 ½
63	2

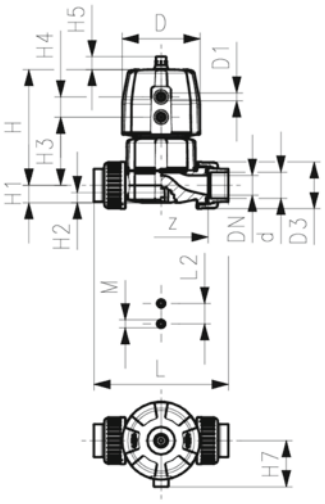

Diaphragm valve DIASTAR Ten PVC-C
DA (Double acting)
Unions with solvent cement sockets metric

Model:

- Double flow rate compared to predecessor
- One housing nut replaces four screws
- Rotating air connection at 90° intervals
- For easy installation and removal
- Short overall length

Option:

- Individual configuration of the valve
- Comprehensive range of accessories available

* PN: PTFE
Working Pressure: **one side**
* O-Ring material: FKM

d (mm)	DN (mm)	Size (inch)	PN (bar)	PN* (bar)	kv-value (Δp=1 bar) (l/min)	EPDM Code	SP	Weight (kg)
20	15	½	10	10*	125	**163 654 012**	1	0.538
25	20	¾	10	10*	271	**163 654 013**	1	0.932
32	25	1	10	10*	481	**163 654 014**	1	1.164
40	32	1 ¼	10	10*	759	**163 654 015**	1	1.885
50	40	1 ½	10	10*	1263	**163 654 016**	1	3.092
63	50	2	10	10*	1728	**163 654 017**	1	4.053

d (mm)	PTFE/ EPDM* Code	SP	Weight (kg)
20	**163 654 032**	1	0.546
25	**163 654 033**	1	0.943
32	**163 654 034**	1	1.183
40	**163 654 035**	1	1.905
50	**163 654 036**	1	3.120
63	**163 654 037**	1	4.080

d (mm)	D (mm)	D1_G (inch)	H (mm)	H1 (mm)	H2 (mm)	H3 (mm)	H4 (mm)	H5 (mm)	H7 (mm)	L (mm)	L2 (mm)	M	z (mm)	Lift = Hx (mm)
20	68	⅛	101	14	12	60	24	16	43	128	25	M6	96	7
25	96	⅛	132	18	12	73	25	16	57	152	25	M6	114	10
32	96	⅛	143	22	12	84	25	16	57	166	25	M6	122	13
40	120	⅛	173	26	15	99	26	26	69	192	45	M8	140	15
50	150	¼	214	32	15	119	36	26	88	222	45	M8	160	19
63	150	¼	226	39	15	132	36	26	88	266	45	M8	190	23

d (mm)	closest inch (inch)
20	½
25	¾
32	1
40	1 ¼
50	1 ½
63	2

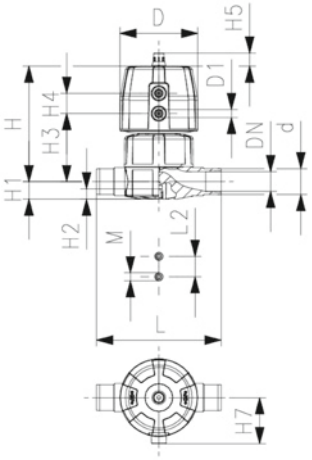

Diaphragm valve DIASTAR Ten PVC-C
DA (Double acting)
With solvent cement spigots metric

Model:

- Double flow rate compared to predecessor
- One housing nut replaces four screws
- Rotating air connection at 90° intervals
- Overall length EN 558

Option:

- Individual configuration of the valve
- Comprehensive range of accessories available

* PN: PTFE
Working Pressure: **one side**
* O-Ring material: FKM

d (mm)	DN (mm)	Size (inch)	PN (bar)	PN* (bar)	kv-value (Δp=1 bar) (l/min)	EPDM Code	SP	Weight (kg)
20	15	½	10	10*	125	**163 655 012**	1	0.473
25	20	¾	10	10*	271	**163 655 013**	1	0.844
32	25	1	10	10*	481	**163 655 014**	1	1.028
40	32	1 ¼	10	10*	759	**163 655 015**	1	1.638
50	40	1 ½	10	10*	1263	**163 655 016**	1	2.762
63	50	2	10	10*	1728	**163 655 017**	1	3.512

d (mm)	PTFE/ EPDM* Code	SP	Weight (kg)
20	**163 655 032**	1	0.473
25	**163 655 033**	1	0.844
32	**163 655 034**	1	1.049
40	**163 655 035**	1	1.659
50	**163 655 036**	1	2.791
63	**163 655 037**	1	3.540

d (mm)	D (mm)	D1_G (inch)	H (mm)	H1 (mm)	H2 (mm)	H3 (mm)	H4 (mm)	H5 (mm)	H7 (mm)	L (mm)	L2 (mm)	M	Lift = Hx (mm)	closest inch (inch)
20	68	⅛	101	14	12	60	24	16	43	124	25	M6	7	½
25	96	⅛	132	18	12	73	25	16	57	144	25	M6	10	¾
32	96	⅛	143	22	12	84	25	16	57	154	25	M6	13	1
40	120	⅛	173	26	15	99	26	26	69	174	45	M8	15	1 ¼
50	150	¼	214	32	15	119	36	26	88	194	45	M8	19	1 ½
63	150	¼	226	39	15	132	36	26	88	224	45	M8	23	2

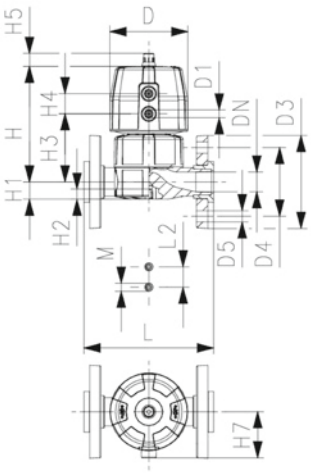

Diaphragm valve DIASTAR Ten PVC-C
DA (Double acting)
With backing flanges PP-V metric/BS

Model:

- Double flow rate compared to predecessor
- One housing nut replaces four screws
- Rotating air connection at 90° intervals
- Flat sealing faces
- Overall length EN 558
- Connecting dimension: ISO 7005 PN 10, EN 1092 PN 10, DIN 2501 PN 10, BS 4504 PN 10

Option:

- Individual configuration of the valve
- Comprehensive range of accessories available

* PN: PTFE
Working Pressure: **one side**
* O-Ring material: FKM

d (mm)	DN (mm)	Size (inch)	PN (bar)	PN* (bar)	kv-value (Δp=1 bar) (l/min)	EPDM Code	SP	Weight (kg)
20	15	½	10	10*	125	**163 657 112**	1	0.657
25	20	¾	10	10*	271	**163 657 113**	1	1.080
32	25	1	10	10*	481	**163 657 114**	1	1.364
40	32	1 ¼	10	10*	759	**163 657 115**	1	2.166
50	40	1 ½	10	10*	1263	**163 657 116**	1	3.302
63	50	2	10	10*	1728	**163 657 117**	1	4.480

d (mm)	PTFE/ EPDM* Code	SP	Weight (kg)
20	**163 657 132**	1	0.657
25	**163 657 133**	1	1.080
32	**163 657 134**	1	1.441
40	**163 657 135**	1	2.187
50	**163 657 136**	1	3.331
63	**163 657 137**	1	4.508

d (mm)	D (mm)	D1_G (inch)	D3 (mm)	D4 (mm)	D5 (mm)	H (mm)	H1 (mm)	H2 (mm)	H3 (mm)	H4 (mm)	H5 (mm)	H7 (mm)	L (mm)	L2 (mm)	M
20	68	⅛	95	65	14	101	14	12	60	24	16	43	130	25	M6
25	96	⅛	105	75	14	132	18	12	73	25	16	57	150	25	M6
32	96	⅛	115	85	14	143	22	12	84	25	16	57	160	25	M6
40	120	⅛	140	100	18	173	26	15	99	26	26	69	180	45	M8
50	150	¼	150	110	18	214	32	15	119	36	26	88	200	45	M8
63	150	¼	165	125	18	226	39	15	132	36	26	88	230	45	M8

d (mm)	Lift = Hx (mm)	closest inch (inch)
20	7	½
25	10	¾
32	13	1
40	15	1 ¼
50	19	1 ½
63	23	2

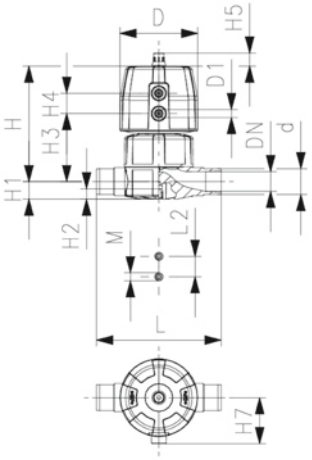

Diaphragm valve DIASTAR Ten PVC-C
FO (Fail safe to open)
With solvent cement spigots metric

Model:

- Double flow rate compared to predecessor
- One housing nut replaces four screws
- Rotating air connection at 90° intervals
- Overall length EN 558

Option:

- Individual configuration of the valve
- Comprehensive range of accessories available

* PN: PTFE
Working Pressure: **one side**
* O-Ring material: FKM

d (mm)	DN (mm)	Size (inch)	PN (bar)	kv-value (Δp=1 bar) (l/min)	PN* (bar)	EPDM Code	SP	Weight (kg)
20	15	½	10	125	10*	**163 645 012**	1	0.489
25	20	¾	10	271	10*	**163 645 013**	1	0.880
32	25	1	10	481	10*	**163 645 014**	1	1.058
40	32	1 ¼	10	759	10*	**163 645 015**	1	1.698
50	40	1 ½	10	1263	10*	**163 645 016**	1	3.512
63	50	2	10	1728	10*	**163 645 017**	1	4.262

d (mm)	PTFE/ EPDM* Code	SP	Weight (kg)
20	**163 645 032**	1	0.489
25	**163 645 033**	1	0.880
32	**163 645 034**	1	1.079
40	**163 645 035**	1	1.719
50	**163 645 036**	1	3.541
63	**163 645 037**	1	4.290

d (mm)	D (mm)	D1_G (inch)	H (mm)	H1 (mm)	H2 (mm)	H3 (mm)	H4 (mm)	H5 (mm)	H7 (mm)	L (mm)	L2 (mm)	M	Lift = Hx (mm)	closest inch (inch)
20	68	⅛	101	14	12	60	24	16	43	124	25	M6	7	½
25	96	⅛	132	18	12	73	25	16	57	144	25	M6	10	¾
32	96	⅛	143	22	12	84	25	16	57	154	25	M6	13	1
40	120	⅛	173	26	15	99	26	26	69	174	45	M8	15	1 ¼
50	150	¼	214	32	15	119	36	26	88	194	45	M8	19	1 ½
63	150	¼	226	39	15	132	36	26	88	224	45	M8	23	2

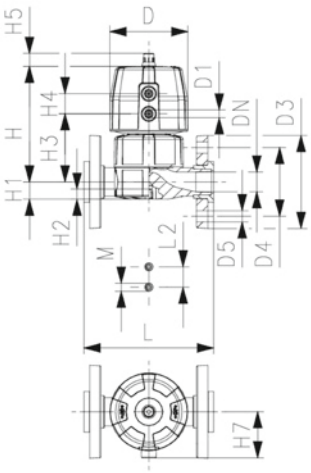

Diaphragm valve DIASTAR Ten PVC-C
FO (Fail safe to open)
With backing flanges PP-V metric/BS

Model:

- Double flow rate compared to predecessor
- One housing nut replaces four screws
- Rotating air connection at 90° intervals
- Flat sealing faces
- Overall length EN 558
- Connecting dimension: ISO 7005 PN 10, EN 1092 PN 10, DIN 2501 PN 10, BS 4504 PN 10

Option:

- Individual configuration of the valve
- Comprehensive range of accessories available

* PN: PTFE

Working Pressure: **one side**

d (mm)	DN (mm)	PN (bar)	PN* (bar)	Size (inch)	kv-value (Δp=1 bar) (l/min)	EPDM Code	SP	Weight (kg)
20	15	10	10*	½	125	**163 647 112**	1	0.673
25	20	10	10*	¾	271	**163 647 113**	1	1.116
32	25	10	10*	1	481	**163 647 114**	1	1.394
40	32	10	10*	1 ¼	759	**163 647 115**	1	2.226
50	40	10	10*	1 ½	1263	**163 647 116**	1	4.052
63	50	10	10*	2	1728	**163 647 117**	1	5.230

d (mm)	PTFE/ EPDM* Code	SP	Weight (kg)
20	**163 647 132**	1	0.673
25	**163 647 133**	1	1.116
32	**163 647 134**	1	1.415
40	**163 647 135**	1	2.247
50	**163 647 136**	1	4.081
63	**163 647 137**	1	4.768

d (mm)	D (mm)	D1_G (inch)	D3 (mm)	D4 (mm)	D5 (mm)	H (mm)	H1 (mm)	H2 (mm)	H3 (mm)	H4 (mm)	H5 (mm)	H7 (mm)	L (mm)	L2 (mm)	M
20	68	⅛	95	65	14	101	14	12	60	24	16	43	130	25	M6
25	96	⅛	105	75	14	132	18	12	73	25	16	57	150	25	M6
32	96	⅛	115	85	14	143	22	12	84	25	16	57	160	25	M6
40	120	⅛	140	100	18	173	26	15	99	26	26	69	180	45	M8
50	150	¼	150	110	18	214	32	15	119	36	26	88	200	45	M8
63	150	¼	165	125	18	226	39	15	132	36	26	88	230	45	M8

d (mm)	Lift = Hx (mm)	closest inch (inch)
20	7	½
25	10	¾
32	13	1
40	15	1 ¼
50	19	1 ½
63	23	2

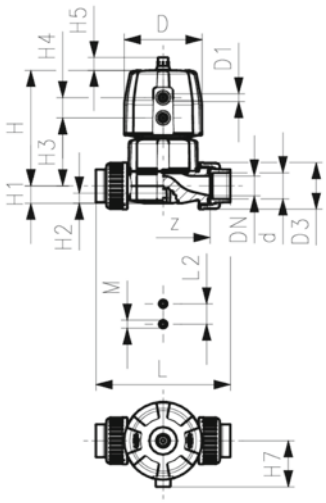

Diaphragm valve DIASTAR Ten PVC-C
FC (Fail safe to close)
Unions with solvent cement sockets metric

Model:

- Double flow rate compared to predecessor
- One housing nut replaces four screws
- Rotating air connection at 90° intervals
- For easy installation and removal
- Short overall length

Option:

- Individual configuration of the valve
- Comprehensive range of accessories available

* PN: PTFE
Working Pressure: **one side**
* O-Ring material: FKM

d (mm)	DN (mm)	Size (inch)	PN (bar)	PN* (bar)	kv-value (Δp=1 bar) (l/min)	EPDM Code	SP	Weight (kg)
20	15	½	10	10*	125	**163 624 012**	1	0.572
25	20	¾	10	10*	271	**163 624 013**	1	1.142
32	25	1	10	10*	481	**163 624 014**	1	1.376
40	32	1 ¼	10	10*	759	**163 624 015**	1	2.305
50	40	1 ½	10	10*	1263	**163 624 016**	1	3.932
63	50	2	10	6*	1728	**163 624 017**	1	4.893

d (mm)	PTFE/ EPDM* Code	SP	Weight (kg)
20	**163 624 032**	1	0.612
25	**163 624 033**	1	1.128
32	**163 624 034**	1	1.393
40	**163 624 035**	1	2.325
50	**163 624 036**	1	3.960
63	**163 624 037**	1	4.925

d (mm)	D (mm)	D1_G (inch)	H (mm)	H1 (mm)	H2 (mm)	H3 (mm)	H4 (mm)	H5 (mm)	H7 (mm)	L (mm)	L2 (mm)	M	z (mm)	Lift = Hx (mm)
20	68	⅛	101	14	12	60	24	16	43	128	25	M6	96	7
25	96	⅛	132	18	12	73	25	16	57	152	25	M6	114	10
32	96	⅛	143	22	12	84	25	16	57	166	25	M6	122	13
40	120	⅛	173	26	15	99	26	26	69	192	45	M8	140	15
50	150	¼	214	32	15	119	36	26	88	222	45	M8	160	19
63	150	¼	226	39	15	132	36	26	88	266	45	M8	190	23

d (mm)	closest inch (inch)
20	½
25	¾
32	1
40	1 ¼
50	1 ½
63	2

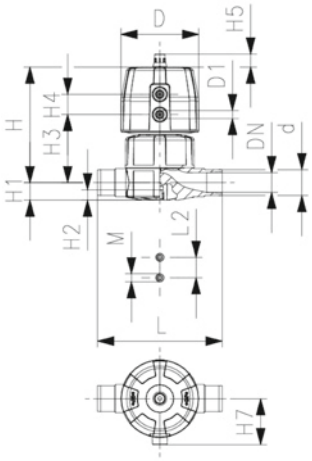

Diaphragm valve DIASTAR Ten PVC-C
FC (Fail safe to close)
With solvent cement spigots metric

Model:

- Double flow rate compared to predecessor
- One housing nut replaces four screws
- Rotating air connection at 90° intervals
- Overall length EN 558

Option:

- Individual configuration of the valve
- Comprehensive range of accessories available

* PN: PTFE
Working Pressure: **one side**
* O-Ring material: FKM

d (mm)	DN (mm)	Size (inch)	PN (bar)	PN* (bar)	kv-value (Δp=1 bar) (l/min)	EPDM Code	SP	Weight (kg)
20	15	½	10	10*	125	**163 625 012**	1	0.510
25	20	¾	10	10*	271	**163 625 013**	1	1.054
32	25	1	10	10*	481	**163 625 014**	1	1.238
40	32	1 ¼	10	10*	759	**163 625 015**	1	2.058
50	40	1 ½	10	10*	1263	**163 625 016**	1	3.602
63	50	2	10	6*	1728	**163 625 017**	1	4.352

d (mm)	PTFE/ EPDM* Code	SP	Weight (kg)
20	**163 625 032**	1	0.539
25	**163 625 033**	1	1.054
32	**163 625 034**	1	1.259
40	**163 625 035**	1	2.079
50	**163 625 036**	1	3.631
63	**163 625 037**	1	4.380

d (mm)	D (mm)	D1_G (inch)	H (mm)	H1 (mm)	H2 (mm)	H3 (mm)	H4 (mm)	H5 (mm)	H7 (mm)	L (mm)	L2 (mm)	M	Lift = Hx (mm)	closest inch (inch)
20	68	⅛	101	14	12	60	24	16	43	124	25	M6	7	½
25	96	⅛	132	18	12	73	25	16	57	144	25	M6	10	¾
32	96	⅛	143	22	12	84	25	16	57	154	25	M6	13	1
40	120	⅛	173	26	15	99	26	26	69	174	45	M8	15	1 ¼
50	150	¼	214	32	15	119	36	26	88	194	45	M8	19	1 ½
63	150	¼	226	39	15	132	36	26	88	224	45	M8	23	2

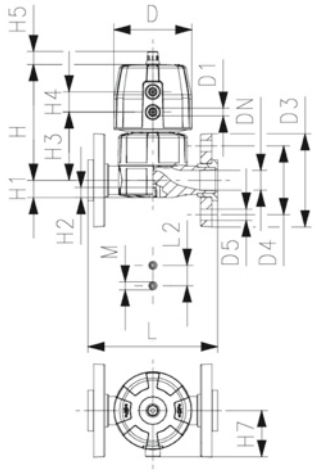

Diaphragm valve DIASTAR Ten PVC-C
FC (Fail safe to close)
With backing flanges PP-V metric/BS

Model:

- Double flow rate compared to predecessor
- One housing nut replaces four screws
- Rotating air connection at 90° intervals
- Flat sealing faces
- Overall length EN 558
- Connecting dimension: ISO 7005 PN 10, EN 1092 PN 10, DIN 2501 PN 10, BS 4504 PN 10

Option:

- Individual configuration of the valve
- Comprehensive range of accessories available

* PN: PTFE
Working Pressure: **one side**
* O-Ring material: FKM

d (mm)	DN (mm)	Size (inch)	PN (bar)	PN* (bar)	kv-value (Δp=1 bar) (l/min)	EPDM Code	SP	Weight (kg)
20	15	½	10	10*	125	**163 627 112**	1	0.723
25	20	¾	10	10*	271	**163 627 113**	1	1.290
32	25	1	10	10*	481	**163 627 114**	1	1.574
40	32	1 ¼	10	10*	759	**163 627 115**	1	2.586
50	40	1 ½	10	10*	1263	**163 627 116**	1	4.142
63	50	2	10	6*	1728	**163 627 117**	1	5.320

d (mm)	PTFE/ EPDM* Code	SP	Weight (kg)
20	**163 627 132**	1	0.723
25	**163 627 133**	1	1.290
32	**163 627 134**	1	1.595
40	**163 627 135**	1	2.607
50	**163 627 136**	1	4.171
63	**163 627 137**	1	5.348

d (mm)	D (mm)	D1_G (inch)	D3 (mm)	D4 (mm)	D5 (mm)	H (mm)	H1 (mm)	H2 (mm)	H3 (mm)	H4 (mm)	H5 (mm)	H7 (mm)	L (mm)	L2 (mm)	M
20	68	⅛	95	65	14	101	14	12	60	24	16	43	130	25	M6
25	96	⅛	105	75	14	132	18	12	73	25	16	57	150	25	M6
32	96	⅛	115	85	14	143	22	12	84	25	16	57	160	25	M6
40	120	⅛	140	100	18	173	26	15	99	26	26	69	180	45	M8
50	150	¼	150	110	18	193	32	15	119	36	26	88	200	45	M8
63	150	¼	165	125	18	205	39	15	132	36	26	88	230	45	M8

d (mm)	Lift = Hx (mm)	closest inch (inch)
20	7	½
25	10	¾
32	13	1
40	15	1 ¼
50	19	1 ½
63	23	2

Diaphragm valves pneumatic DIASTAR TenPlus

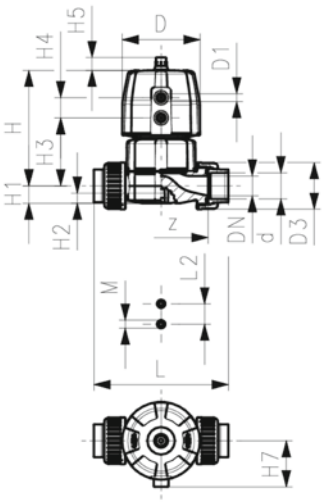

Diaphragm valve DIASTAR TenPlus PVC-C
FC (Fail safe to close)
Unions with solvent cement sockets metric

Model:

- Double flow rate compared to predecessor
- One housing nut replaces four screws
- Rotating air connection at 90° intervals
- For easy installation and removal
- Short overall length

Option:

- Individual configuration of the valve
- Comprehensive range of accessories available

* PN: PTFE
Working Pressure: **both sides**
* O-Ring material: FKM

d (mm)	DN (mm)	Size (inch)	PN (bar)	PN* (bar)	kv-value (Δp=1 bar) (l/min)	EPDM Code	SP	Weight (kg)
20	15	½	10	10*	125	**163 684 012**	1	1.004
25	20	¾	10	10*	271	**163 684 013**	1	1.142
32	25	1	10	10*	481	**163 684 014**	1	1.968
40	32	1 ¼	10	10*	759	**163 684 015**	1	3.375
50	40	1 ¼	10	10*	1263	**163 684 016**	1	5.340
63	50	2	10	10*	1728	**163 684 017**	1	6.300

d (mm)	PTFE/ EPDM* Code	SP	Weight (kg)
20	**163 684 032**	1	1.012
25	**163 684 033**	1	1.153
32	**163 684 034**	1	1.987
40	**163 684 035**	1	3.395
50	**163 684 036**	1	5.368
63	**163 684 037**	1	6.327

d (mm)	D (mm)	D1_G (inch)	H (mm)	H1 (mm)	H2 (mm)	H3 (mm)	H4 (mm)	H5 (mm)	H7 (mm)	L (mm)	L2 (mm)	M	z (mm)	Lift = Hx (mm)
20	96	⅛	127	14	12	68	25	16	57	128	25	M6	96	7
25	96	⅛	132	18	12	73	25	16	57	152	25	M6	114	10
32	120	⅛	167	22	12	93	26	26	69	166	25	M6	122	13
40	150	¼	196	26	15	101	36	26	88	192	45	M8	140	15
50	180	¼	239	32	15	124	37	26	103	222	45	M8	160	19
63	180	¼	251	39	15	137	37	26	103	266	45	M8	190	23

d (mm)	closest inch (inch)
20	½
25	¾
32	1
40	1 ¼
50	1 ½
63	2

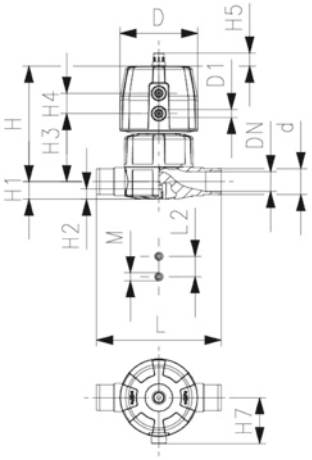

Diaphragm valve DIASTAR TenPlus PVC-C
FC (Fail safe to close)
With solvent cement spigots metric

Model:

- Double flow rate compared to predecessor
- One housing nut replaces four screws
- Rotating air connection at 90° intervals
- Overall length EN 558

Option:

- Individual configuration of the valve
- Comprehensive range of accessories available

* PN: PTFE
Working Pressure: **both sides**
* O-Ring material: FKM

d (mm)	DN (mm)	Size (inch)	PN (bar)	PN* (bar)	kv-value (Δp=1 bar) (l/min)	EPDM Code	SP	Weight (kg)
20	15	½	10	10*	125	**163 685 012**	1	0.943
25	20	¾	10	10*	271	**163 685 013**	1	1.054
32	25	1	10	10*	481	**163 685 014**	1	1.947
40	32	1 ¼	10	10*	759	**163 685 015**	1	3.128
50	40	1 ½	10	10*	1263	**163 685 016**	1	5.010
63	50	2	10	10*	1728	**163 685 017**	1	5.759

d (mm)	PTFE/ EPDM* Code	SP	Weight (kg)
20	**163 685 032**	1	0.939
25	**163 685 033**	1	1.054
32	**163 685 034**	1	1.853
40	**163 685 035**	1	3.149
50	**163 685 036**	1	5.039
63	**163 685 037**	1	5.787

d (mm)	D (mm)	D1_G (inch)	H (mm)	H1 (mm)	H2 (mm)	H3 (mm)	H4 (mm)	H5 (mm)	H7 (mm)	L (mm)	L2 (mm)	M	Lift = Hx (mm)	closest inch (inch)
20	96	⅛	127	14	12	68	25	16	57	124	25	M6	7	½
25	96	⅛	132	18	12	73	25	16	57	144	25	M6	10	¾
32	120	⅛	167	22	12	93	26	26	69	154	25	M6	13	1
40	150	¼	196	26	15	101	36	26	88	174	45	M8	15	1 ¼
50	180	¼	239	32	15	124	37	26	103	194	45	M8	19	1 ½
63	180	¼	251	39	15	137	37	26	103	224	45	M8	23	2

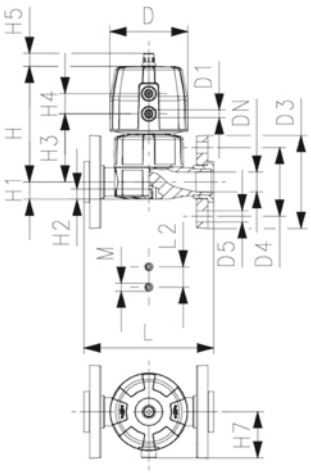

Diaphragm valve DIASTAR TenPlus PVC-C
FC (Fail safe to close)
With backing flanges PP-V metric/BS

Model:

- Double flow rate compared to predecessor
- One housing nut replaces four screws
- Rotating air connection at 90° intervals
- Flat sealing faces
- Overall length EN 558
- Connecting dimension: ISO 7005 PN 10, EN 1092 PN 10, DIN 2501 PN 10, BS 4504 PN 10

Option:

- Individual configuration of the valve
- Comprehensive range of accessories available

* PN: PTFE
Working Pressure: **both sides**
* O-Ring material: FKM

d (mm)	DN (mm)	Size (inch)	PN (bar)	PN* (bar)	kv-value (Δp=1 bar) (l/min)	EPDM Code	SP	Weight (kg)
20	15	½	10	10*	125	**163 687 112**	1	1.123
25	20	¾	10	10*	271	**163 687 113**	1	1.290
32	25	1	10	10*	481	**163 687 114**	1	2.168
40	32	1 ¼	10	10*	759	**163 687 115**	1	3.656
50	40	1 ½	10	10*	1263	**163 687 116**	1	5.550
63	50	2	10	10*	1728	**163 687 117**	1	6.727

d (mm)	PTFE/ EPDM* Code	SP	Weight (kg)
20	**163 687 132**	1	1.123
25	**163 687 133**	1	1.290
32	**163 687 134**	1	2.320
40	**163 687 135**	1	3.677
50	**163 687 136**	1	5.579
63	**163 687 137**	1	7.147

d (mm)	D (mm)	D1_G (inch)	D3 (mm)	D4 (mm)	D5 (mm)	H (mm)	H1 (mm)	H2 (mm)	H3 (mm)	H4 (mm)	H5 (mm)	H7 (mm)	L (mm)	L2 (mm)	M
20	96	⅛	95	65	14	127	14	12	68	25	16	57	130	25	M6
25	96	⅛	105	75	14	132	18	12	73	25	16	57	150	25	M6
32	120	⅛	115	85	14	167	22	12	93	26	26	69	160	25	M6
40	150	¼	140	100	18	196	26	15	101	36	26	88	180	45	M8
50	180	¼	150	110	18	239	32	15	124	37	26	103	200	45	M8
63	180	¼	165	125	18	251	39	15	137	37	26	103	230	45	M8

d (mm)	Lift = Hx (mm)	closest inch (inch)
20	7	½
25	10	¾
32	13	1
40	15	1 ¼
50	19	1 ½
63	23	2

Diaphragm valves DIASTAR big dimensions

Diaphragm valve type DIASTAR PVC-C
Series 025 FC (Fail safe to close)
With fixed flanges PVC-C metric

Model:

- Connecting dimension: ISO 7005 / EN 1092 / DIN 25 PN10 / BS4504
- With position indicator / Working pressure: **one side**

* With backing flanges PP-V
**** DN80, DN100 and DN150 fixed flanges metric and inch ANSI B16.5**

	d (mm)	Size (inch)	DN (mm)	PN (bar)	kv-value (Δp=1 bar) (l/min)	EPDM Code	Weight (kg)	PTFE/EPDM Code	Weight (kg)
*	75	2 ½	65	10	992	**199 025 697**	13.600	**199 025 727**	13.600
**	90	3	80	10	1700	**199 025 698**	17.830	**199 025 728**	17.973
**	110	4	100	6	2700	**199 025 699**	24.700	**199 025 729**	24.700

	d (mm)	D (mm)	D1_G (inch)	D2 (mm)	D3[M] (mm)	D4 (mm)	H (mm)	H1 (mm)	H2 (mm)	H3 (mm)	H4 (mm)	H5 (mm)	H6 (mm)	H7 (mm)	H9 (mm)
*	75	280	¼	185	8	145	344	148	24	46	100	129	195	298	46
**	90	280	¼	200	12	160	348	150	24	46	100	129	195	302	57
**	110	335	¼	225	12	180	395	176	24	46	100	129	195	349	69

	d (mm)	H10 (mm)	L (mm)	L2 (mm)
*	75	15	290	70
**	90	15	310	120
**	110	20	350	120

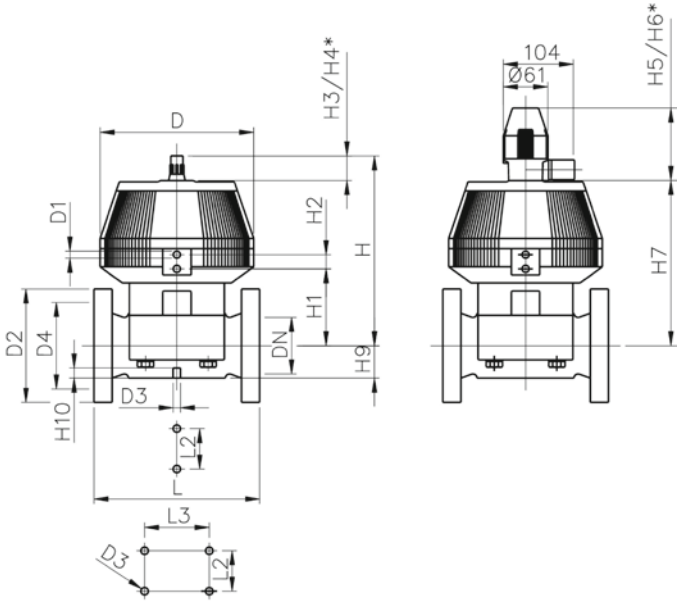

Diaphragm valve type DIASTAR PVC-C
Series 025 FO (Fail safe to open)
With fixed flanges PVC-C metric

Model:

- Connecting dimension: ISO 7005 / EN 1092 / DIN 25 PN10 / BS4504
- With position indicator / Working pressure: **one side**

* With backing flanges PP-V
**** DN80, DN100 and DN150 fixed flanges metric and inch ANSI B16.5**

	d (mm)	Size (inch)	DN (mm)	PN (bar)	kv-value (Δp=1 bar) (l/min)	EPDM Code	Weight (kg)	PTFE/EPDM Code	Weight (kg)
*	75	2 ½	65	10	992	**199 025 707**	13.600	**199 025 737**	13.600
**	90	3	80	10	1700	**199 025 708**	17.400	**199 025 738**	17.400
**	110	4	100	6	2700	**199 025 709**	24.700	**199 025 679**	24.700

	d (mm)	D (mm)	D1_G (inch)	D2 (mm)	D3[M] (mm)	D4 (mm)	H (mm)	H1 (mm)	H2 (mm)	H3 (mm)	H4 (mm)	H5 (mm)	H6 (mm)	H7 (mm)	H9 (mm)
*	75	280	¼	185	8	145	344	148	24	46	100	129	195	298	46
**	90	280	¼	200	12	160	348	150	24	46	100	129	195	302	57
**	110	335	¼	225	12	180	395	176	24	46	100	129	195	349	69

	d (mm)	H10 (mm)	L (mm)	L2 (mm)
*	75	15	290	70
**	90	15	310	120
**	110	20	350	120

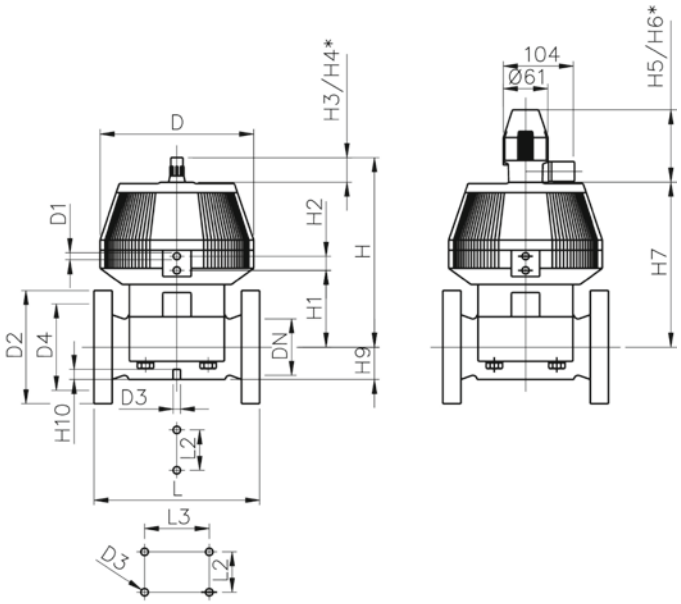

+GF+

Diaphragm valve type DIASTAR PVC-C
Series 025 DA (Double acting)
With fixed flanges PVC-C metric

Model:

- Connecting dimension: ISO 7005 / EN 1092 / DIN 25 PN10 / BS4504
- With position indicator / Working pressure: **one side**

* With backing flanges PP-V

**** DN80 and DN100 fixed flanges metric and inch ANSI B16.5**

	d (mm)	Size (inch)	DN (mm)	PN (bar)	kv-value (Δp=1 bar) (l/min)	EPDM Code	Weight (kg)	PTFE/EPDM Code	Weight (kg)
*	75	2 ½	65	10	992	**199 025 717**	12.529	**199 025 747**	13.600
**	90	3	80	10	1700	**199 025 718**	17.400	**199 025 748**	17.400
**	110	4	100	6	2700	**199 025 719**	24.700	**199 025 749**	24.700

	d (mm)	D (mm)	D1_G (inch)	D2 (mm)	D3[M] (mm)	D4 (mm)	H (mm)	H1 (mm)	H2 (mm)	H3 (mm)	H4 (mm)	H5 (mm)	H6 (mm)	H7 (mm)	H9 (mm)
*	75	280	¼	185	8	145	344	148	24	46	100	129	195	298	46
**	90	280	¼	200	12	160	348	150	24	46	100	129	195	302	57
**	110	335	¼	225	12	180	395	176	24	46	100	129	195	349	69

	d (mm)	H10 (mm)	L (mm)	L2 (mm)
*	75	15	290	70
**	90	15	310	120
**	110	20	350	120

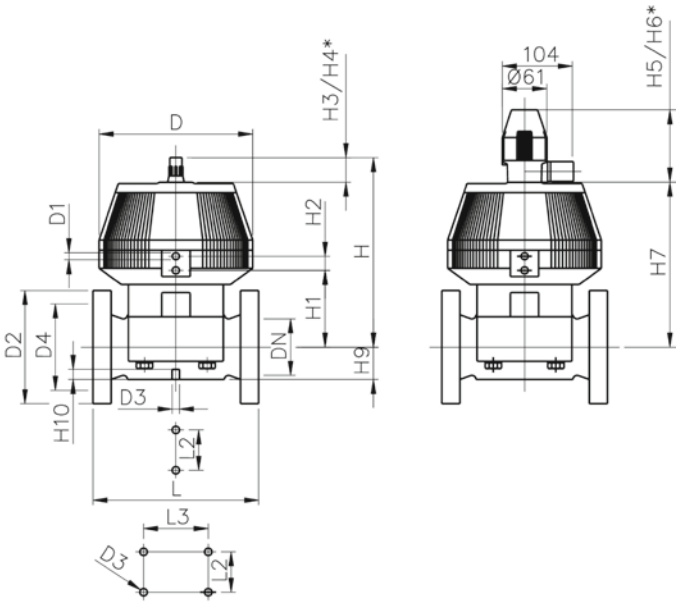

Pressure reducing valves type 582

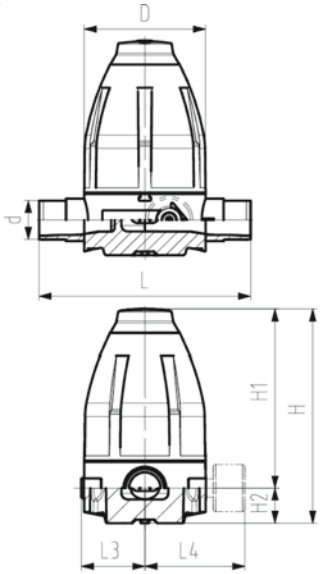

Pressure reducing valve type 582 PVC-C
With solvent cement spigots metric
Without manometer

Model:

- Diaphragm PTFE/EPDM
- Integrated stainless steel mounting inserts
- 0.5-9.0 bar (7-130 psi)

0.3-3.0 bar (4-44 psi) on request
Manometer on request

d (mm)	DN (mm)	Size (inch)	PN (bar)	O-rings EPDM Code	Weight (kg)	SP	O-rings FKM Code
16	10	⅜	10	**163 582 001**	0.650	1	**163 582 011**
20	15	½	10	**163 582 002**	0.650	1	**163 582 012**
25	20	¾	10	**163 582 003**	1.450	1	**163 582 013**
32	25	1	10	**163 582 004**	1.460	1	**163 582 014**
40	32	1 ¼	10	**163 582 005**	4.070	1	**163 582 015**
50	40	1 ½	10	**163 582 006**	4.080	1	**163 582 016**
63	50	2	10	**163 582 007**	4.160	1	**163 582 017**

d (mm)	D (mm)	H (mm)	H1 (mm)	H2 (mm)	H3 (mm)	L (mm)	L3 (mm)	M	closest inch (inch)
16	79	132	111	21	12	134	42	M6	⅜
20	79	132	111	21	12	134	42	M6	½
25	100	177	148	29	14	174	53	M6	¾
32	100	177	148	29	14	174	53	M6	1
40	147	251	207	44	21	224	76	M8	1 ¼
50	147	251	207	44	21	224	76	M8	1 ½
63	147	251	207	44	21	244	76	M8	2

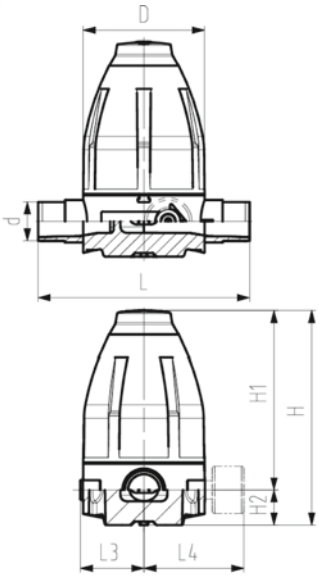

Pressure reducing valve type 582 PVC-C
With solvent cement spigots metric
With manometer

Model:

- Diaphragm PTFE/EPDM
- Integrated stainless steel mounting inserts
- 0.5-9.0 bar (7-130 psi)
- Attention: Manometer with brass connection in direct contact with medium. Check for chemical resistance, otherwise chose the optional manometer adapter for media separation.

0.3-3.0 bar (4-44 psi) on request

d (mm)	DN (mm)	Size (inch)	PN (bar)	O-rings EPDM Code	Weight (kg)	SP	O-rings FKM Code
16	10	⅜	10	**163 582 021**	0.680	1	**163 582 031**
20	15	½	10	**163 582 022**	0.680	1	**163 582 032**
25	20	¾	10	**163 582 023**	1.480	1	**163 582 033**
32	25	1	10	**163 582 024**	1.490	1	**163 582 034**
40	32	1 ¼	10	**163 582 025**	4.100	1	**163 582 035**
50	40	1 ½	10	**163 582 026**	4.110	1	**163 582 036**
63	50	2	10	**163 582 027**	4.190	1	**163 582 037**

d (mm)	D (mm)	H (mm)	H1 (mm)	H2 (mm)	H3 (mm)	L (mm)	L3 (mm)	L4 (mm)	M	closest inch (inch)
16	79	132	111	21	12	134	42	77	M6	⅜
20	79	132	111	21	12	134	42	77	M6	½
25	100	177	148	29	14	174	53	88	M6	¾
32	100	177	148	29	14	174	53	88	M6	1
40	147	251	207	44	21	224	76	111	M8	1 ¼
50	147	251	207	44	21	224	76	111	M8	1 ½
63	147	251	207	44	21	244	76	111	M8	2

Pressure reducing valve type 582 PVC-C
Unions with solvent cement sockets metric
Without manometer

Model:

- Diaphragm PTFE/EPDM
- Integrated stainless steel mounting inserts
- 0.5-9.0 bar (7-130 psi)

0.3-3.0 bar (4-44 psi) on request
Manometer on request

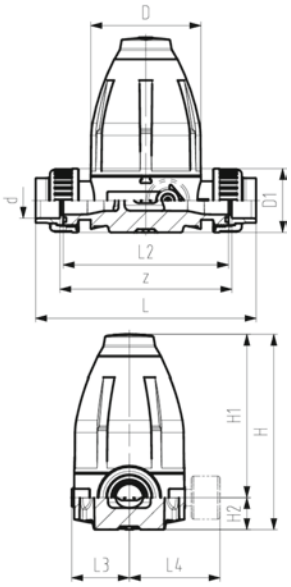

d (mm)	DN (mm)	Size (inch)	PN (bar)	O-rings EPDM Code	Weight (kg)	SP	O-rings FKM Code
20	15	½	10	**163 582 102**	0.730	1	**163 582 112**
25	20	¾	10	**163 582 103**	1.540	1	**163 582 113**
32	25	1	10	**163 582 104**	1.580	1	**163 582 114**
40	32	1 ¼	10	**163 582 105**	4.220	1	**163 582 115**
50	40	1 ½	10	**163 582 106**	4.410	1	**163 582 116**
63	50	2	10	**163 582 107**	4.660	1	**163 582 117**

d (mm)	D (mm)	D1 (mm)	H (mm)	H1 (mm)	H2 (mm)	H3 (mm)	L (mm)	L2 (mm)	L3 (mm)	M	z (mm)	closest inch (inch)
20	79	43	132	111	21	12	162	120	42	M6	126	½
25	100	51	177	148	29	14	198	150	53	M6	156	¾
32	100	58	177	148	29	14	204	150	53	M6	156	1
40	147	72	251	207	44	21	267	205	76	M8	211	1 ¼
50	147	83	251	207	44	21	273	205	76	M8	211	1 ½
63	147	100	251	207	44	21	287	205	76	M8	211	2

Pressure reducing valve type 582 PVC-C
Unions with solvent cement sockets metric
With manometer

Model:

- Diaphragm PTFE/EPDM
- Integrated stainless steel mounting inserts
- 0.5-9.0 bar (7-130 psi)
- Attention: Manometer with brass connection in direct contact with medium. Check for chemical resistance, otherwise chose the optional manometer adapter for media separation.

0.3-3.0 bar (4-44 psi) on request

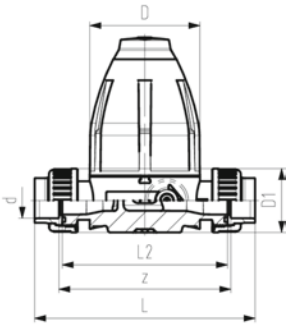

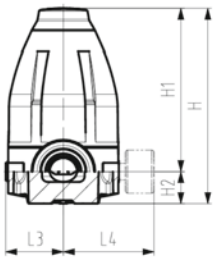

d (mm)	DN (mm)	Size (inch)	PN (bar)	O-rings EPDM Code	Weight (kg)	SP	O-rings FKM Code
20	15	½	10	**163 582 122**	0.760	1	**163 582 132**
25	20	¾	10	**163 582 123**	1.570	1	**163 582 133**
32	25	1	10	**163 582 124**	1.610	1	**163 582 134**
40	32	1 ¼	10	**163 582 125**	4.250	1	**163 582 135**
50	40	1 ½	10	**163 582 126**	4.440	1	**163 582 136**
63	50	2	10	**163 582 127**	4.690	1	**163 582 137**

d (mm)	D (mm)	D1 (mm)	H (mm)	H1 (mm)	H2 (mm)	H3 (mm)	L (mm)	L2 (mm)	L3 (mm)	L4 (mm)	M	z (mm)	closest inch (inch)
20	79	43	132	111	21	12	162	120	42	77	M6	126	½
25	100	51	177	148	29	14	198	150	53	88	M6	156	¾
32	100	58	177	148	29	14	204	150	53	88	M6	156	1
40	147	72	251	207	44	21	267	205	76	111	M8	211	1 ¼
50	147	83	251	207	44	21	273	205	76	111	M8	211	1 ½
63	147	100	251	207	44	21	287	205	76	111	M8	211	2

Pressure retaining valves type 586

Pressure retaining valve type 586 PVC-C
With solvent cement spigots metric
Without manometer

Model:

- Diaphragm PTFE/EPDM
- Integrated stainless steel mounting inserts
- 0.5-9.0 bar (7-130 psi)

0.3-3.0 bar (4-44 psi) on request
Manometer on request

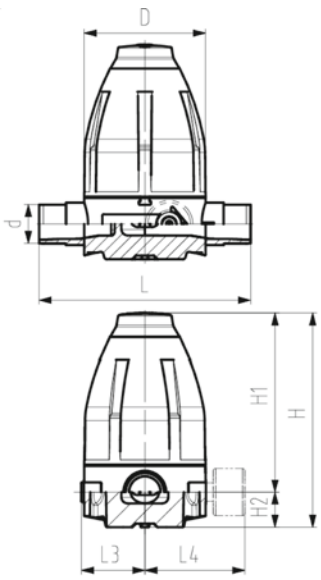

d (mm)	DN (mm)	Size (inch)	PN (bar)	O-rings EPDM Code	Weight (kg)	SP	O-rings FKM Code
16	10	⅜	10	**163 586 001**	0.640	1	**163 586 011**
20	15	½	10	**163 586 002**	0.650	1	**163 586 012**
25	20	¾	10	**163 586 003**	1.470	1	**163 586 013**
32	25	1	10	**163 586 004**	1.470	1	**163 586 014**
40	32	1 ¼	10	**163 586 005**	4.100	1	**163 586 015**
50	40	1 ½	10	**163 586 006**	4.100	1	**163 586 016**
63	50	2	10	**163 586 007**	4.180	1	**163 586 017**

d (mm)	D (mm)	H (mm)	H1 (mm)	H2 (mm)	H3 (mm)	L (mm)	L3 (mm)	M	closest inch (inch)
16	79	132	111	21	12	134	42	M6	⅜
20	79	132	111	21	12	134	42	M6	½
25	100	177	148	29	14	174	53	M6	¾
32	100	177	148	29	14	174	53	M6	1
40	147	251	207	44	21	224	76	M8	1 ¼
50	147	251	207	44	21	224	76	M8	1 ½
63	147	251	207	44	21	244	76	M8	2

Pressure retaining valve type 586 PVC-C
Unions with solvent cement sockets metric
Without manometer

Model:

- Diaphragm PTFE/EPDM
- Integrated stainless steel mounting inserts
- 0.5-9.0 bar (7-130 psi)

0.3-3.0 bar (4-44 psi) on request
Manometer on request

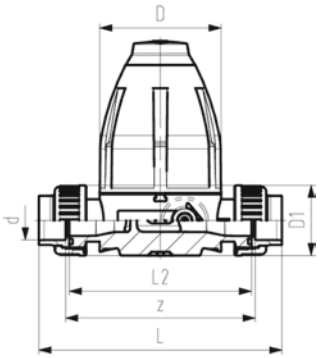

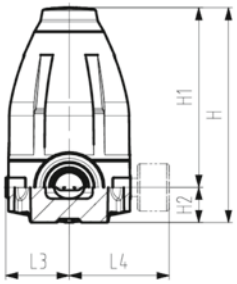

d (mm)	DN (mm)	Size (inch)	PN (bar)	O-rings EPDM Code	Weight (kg)	SP	O-rings FKM Code
20	15	½	10	**163 586 102**	0.720	1	**163 586 112**
25	20	¾	10	**163 586 103**	1.560	1	**163 586 113**
32	25	1	10	**163 586 104**	1.600	1	**163 586 114**
40	32	1 ¼	10	**163 586 105**	4.360	1	**163 586 115**
50	40	1 ½	10	**163 586 106**	4.430	1	**163 586 116**
63	50	2	10	**163 586 107**	4.690	1	**163 586 117**

d (mm)	D (mm)	D1 (mm)	H (mm)	H1 (mm)	H2 (mm)	H3 (mm)	L (mm)	L2 (mm)	L3 (mm)	M	z (mm)	closest inch (inch)
20	79	43	132	111	21	12	162	120	42	M6	126	½
25	100	51	177	148	29	14	198	150	53	M6	156	¾
32	100	58	177	148	29	14	204	150	53	M6	156	1
40	147	72	251	207	44	21	267	205	76	M8	211	1 ¼
50	147	83	251	207	44	21	273	205	76	M8	211	1 ½
63	147	100	251	207	44	21	287	205	76	M8	211	2

Process control valves

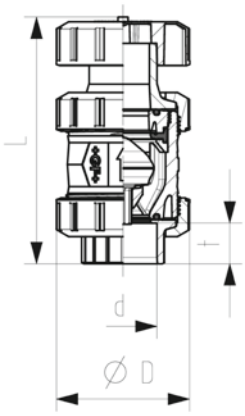

Ventilating and bleed valve Type 591 PVC-C
With solvent cement sockets metric

Model:

- With protection cap up to DN50 made of PP-GF, DN65-100 made of POM
- Floater made of PP-H
- Designed for easy installation and removal
- Compact installation length

d (mm)	DN (mm)	PN (bar)	EPDM Code	FKM Code	D (mm)	L (mm)	t (mm)	closest inch (inch)
16	10	16	**163 591 001**	**163 591 011**	50	118	14	⅜
20	15	16	**163 591 002**	**163 591 012**	50	124	16	½
25	20	16	**163 591 003**	**163 591 013**	58	142	19	¾
32	25	16	**163 591 004**	**163 591 014**	68	157	22	1
40	32	16	**163 591 005**	**163 591 015**	84	179	26	1 ¼
50	40	16	**163 591 006**	**163 591 016**	97	197	31	1 ½
63	50	16	**163 591 007**	**163 591 017**	124	229	38	2
75	65	16	**163 591 008**	**163 591 018**	166	258	45	2 ½
90	80	16	**163 591 009**	**163 591 019**	200	277	52	3
110	100	16	**163 591 010**	**163 591 020**	238	320	64	4

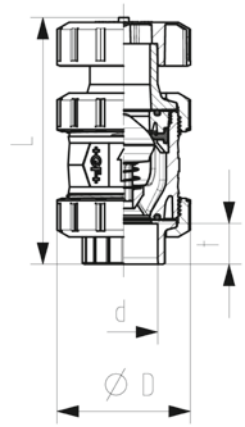

Ventilating valve type 595 PVC-C
With solvent cement sockets metric

Model:

- With protection cap up to DN50 made of PP-GF, DN65-100 made of POM
- Spring HALAR coated
- Spring available in other materials, see spare parts
- Designed for easy installation and removal
- Compact installation length

d (mm)	DN (mm)	PN (bar)	EPDM Code	FKM Code	D (mm)	L (mm)	t (mm)	closest inch (inch)
16	10	16	**163 595 001**	**163 595 011**	50	118	14	⅜
20	15	16	**163 595 002**	**163 595 012**	50	124	16	½
25	20	16	**163 595 003**	**163 595 013**	58	142	19	¾
32	25	16	**163 595 004**	**163 595 014**	68	157	22	1
40	32	16	**163 595 005**	**163 595 015**	84	179	26	1 ¼
50	40	16	**163 595 006**	**163 595 016**	97	197	31	1 ½
63	50	16	**163 595 007**	**163 595 017**	124	229	38	2
75	65	16	**163 595 008**	**163 595 018**	166	258	45	2 ½
90	80	16	**163 595 009**	**163 595 019**	200	277	52	3
110	100	16	**163 595 010**	**163 595 020**	238	320	64	4

Cone check valves

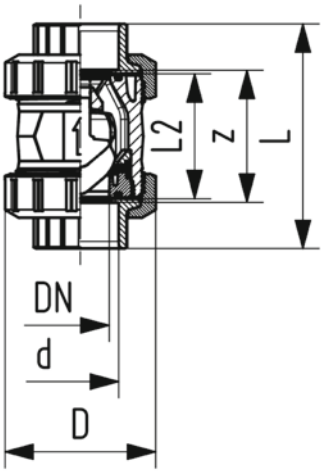

Check valve type 561 PVC-C
With solvent cement sockets metric

Model:

- Sealing at a minimum water column of 2 m
- Designed for easy installation and removal
- Vibration free even at high flow velocity
- Flow-optimized return cone, double guided
- For vertical installation
- Compact installation length, same as ball valve type 546
- Z-length, end connectors and union nuts **not** compatible with type 360

d (mm)	DN (mm)	Size (inch)	PN (bar)	kv-value (Δp=1 bar) (l/min)	EPDM Code	SP	Weight (kg)	FKM Code	SP	Weight (kg)
16	10	⅜	16	190	**163 561 001**	1	0.120	**163 561 011**	1	0.120
20	15	½	16	180	**163 561 002**	1	0.120	**163 561 012**	1	0.120
25	20	¾	16	380	**163 561 003**	1	0.260	**163 561 013**	1	0.280
32	25	1	16	460	**163 561 004**	1	0.280	**163 561 014**	1	0.280
40	32	1 ¼	16	850	**163 561 005**	1	0.490	**163 561 015**	1	0.490
50	40	1 ½	16	1080	**163 561 006**	1	0.710	**163 561 016**	1	0.710
63	50	2	16	1670	**163 561 007**	1	1.456	**163 561 017**	1	1.470
75	65	2 ½	16	2950	**163 561 008**	1	3.460	**163 561 018**	1	3.480
90	80	3	16	3600	**163 561 009**	1	5.540	**163 561 019**	1	5.570
110	100	4	16	4150	**163 561 010**	1	8.930	**163 561 020**	1	8.970

d (mm)	D (mm)	L (mm)	L2 (mm)	z (mm)	closest inch (inch)
16	50	92	56	64	⅜
20	50	95	56	64	½
25	58	110	65	72	¾
32	68	123	71	79	1
40	84	146	85	94	1 ¼
50	97	157	89	95	1 ½
63	124	183	101	107	2
75	166	233	136	144	2 ½
90	200	254	141	151	3
110	238	301	164	174	4

Check valve type 561 PVC-C
With threaded sockets Rp

Model:

- Sealing at a minimum water column of 2 m
- Designed for easy installation and removal
- Vibration free even at high flow velocity
- Flow-optimized return cone, double guided
- For vertical installation
- Compact installation length, same as ball valve type 546
- Z-length, end connectors and union nuts **not** compatible with type 360
- New DN65-DN100

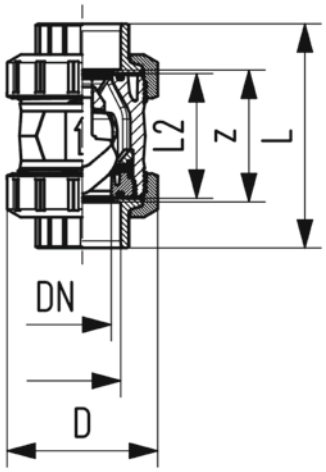

d (mm)	DN (mm)	Thread Type	Size (inch)	PN (bar)	kv-value (Δp=1 bar) (l/min)	EPDM Code	SP	Weight (kg)
16	10	Rp	⅜	10	190	**163 561 021**	1	0.120
20	15	Rp	½	10	180	**163 561 022**	1	0.120
25	20	Rp	¾	10	380	**163 561 023**	1	0.260
32	25	Rp	1	10	460	**163 561 024**	1	0.290
40	32	Rp	1 ¼	10	850	**163 561 025**	1	0.490
50	40	Rp	1 ½	10	1080	**163 561 026**	1	0.740
63	50	Rp	2	10	1670	**163 561 027**	1	1.530
75	65	Rp	2 ½	10	2950	**163 561 028**	1	3.530
90	80	Rp	3	10	3600	**163 561 029**	1	5.670
110	100	Rp	4	10	4150	**163 561 030**	1	8.990

FKM Code	SP	Weight (kg)	D (mm)	L (mm)	L2 (mm)	z (mm)
163 561 031	1	0.120	50	95	56	69
163 561 032	1	0.120	50	100	56	67
163 561 033	1	0.280	58	114	65	78
163 561 034	1	0.290	68	127	71	85
163 561 035	1	0.500	84	146	85	100
163 561 036	1	0.750	97	152	89	106
163 561 037	1	1.530	124	177	101	121
163 561 038	1	3.550	166	233	136	144
163 561 039	1	5.700	200	254	141	151
163 561 040	1	9.030	238	301	164	174

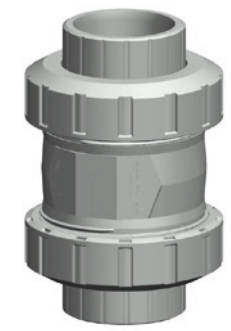

Check valve type 562 PVC-C
With solvent cement sockets metric

Model:

- For horizontal or vertical installation
- Sealing at a minimum water column of 1 m
- Spring loaded, spring made of stainless steel (1.4310)
- Spring available in other materials, see spare parts
- Designed for easy installation and removal
- Vibration free even at high flow velocity
- Flow-optimized return cone, double guided
- Compact installation length, same as ball valve type 546
- Z-length, end connectors and union nuts **not** compatible with type 360

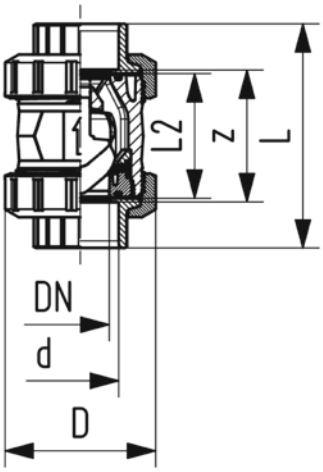

d (mm)	DN (mm)	PN (bar)	kv-value (Δp=1 bar) (l/min)	EPDM Code	SP	Weight (kg)	FKM Code	SP	Weight (kg)
16	10	16	190	**163 562 001**	1	0.120	**163 562 011**	1	0.120
20	15	16	180	**163 562 002**	1	0.120	**163 562 012**	1	0.120
25	20	16	380	**163 562 003**	1	0.260	**163 562 013**	1	0.280
32	25	16	460	**163 562 004**	1	0.280	**163 562 014**	1	0.280
40	32	16	850	**163 562 005**	1	0.490	**163 562 015**	1	0.490
50	40	16	1080	**163 562 006**	1	0.710	**163 562 016**	1	0.710
63	50	16	1670	**163 562 007**	1	1.460	**163 562 017**	1	1.470
75	65	16	2950	**163 562 008**	1	3.460	**163 562 018**	1	3.480
90	80	16	3600	**163 562 009**	1	5.540	**163 562 019**	1	5.570
110	100	16	4150	**163 562 010**	1	8.930	**163 562 020**	1	8.970

d (mm)	D (mm)	L (mm)	L2 (mm)	z (mm)	closest inch (inch)
16	50	92	56	64	⅜
20	50	95	56	64	½
25	58	110	65	72	¾
32	68	123	71	79	1
40	84	146	85	94	1 ¼
50	97	157	89	95	1 ½
63	124	183	101	107	2
75	166	233	136	144	2 ½
90	200	254	141	151	3
110	238	301	164	174	4

Check valve type 562 PVC-C
With threaded sockets Rp

Model:

- For horizontal or vertical installation
- Sealing at a minimum water column of 1 m
- Spring loaded, spring made of stainless steel (1.4310)
- Spring available in other materials, see spare parts
- Designed for easy installation and removal
- Vibration free even at high flow velocity
- Flow-optimized return cone, double guided
- Compact installation length, same as ball valve type 546
- Z-length, end connectors and union nuts **not** compatible with type 360
- New DN65-DN100

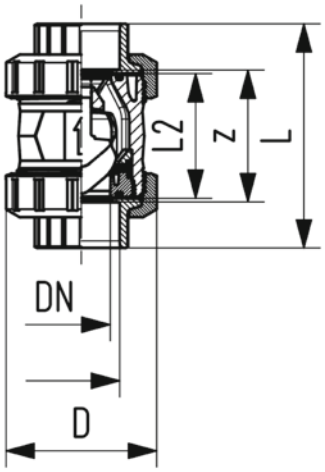

Rp (inch)	DN (mm)	PN (bar)	kv-value (Δp=1 bar) (l/min)	EPDM Code	SP	Weight (kg)	FKM Code	SP	Weight (kg)
⅜	10	10	190	**163 562 021**	1	0.120	**163 562 031**	1	0.120
½	15	10	180	**163 562 022**	1	0.120	**163 562 032**	1	0.120
¾	20	10	380	**163 562 023**	1	0.260	**163 562 033**	1	0.280
1	25	10	460	**163 562 024**	1	0.290	**163 562 034**	1	0.290
1 ¼	32	10	850	**163 562 025**	1	0.490	**163 562 035**	1	0.500
1 ½	40	10	1080	**163 562 026**	1	0.740	**163 562 036**	1	0.750
2	50	10	1670	**163 562 027**	1	1.530	**163 562 037**	1	1.530
2 ½	65	10	2950	**163 562 028**	1	3.530	**163 562 038**	1	3.550
3	80	10	3600	**163 562 029**	1	5.670	**163 562 039**	1	5.700
4	100	10	4150	**163 562 030**	1	8.990	**163 562 040**	1	9.030

Rp (inch)	D (mm)	L (mm)	L2 (mm)	z (mm)
⅜	50	95	56	69
½	50	100	56	67
¾	58	114	65	78
1	68	127	71	85
1 ¼	84	146	85	100
1 ½	97	152	89	106
2	124	177	101	121
2 ½	166	233	136	144
3	200	254	141	151
4	238	301	164	174

Strainers

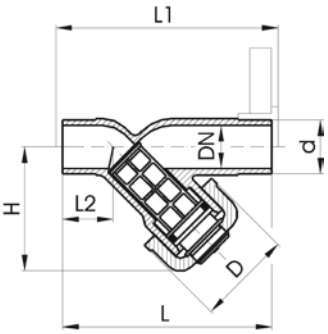

Line strainer type 305 PVC-C
With solvent cement spigots metric

Model:

- Protects valves, pumps, etc. from becoming soiled
- Easy dismantling for cleaning the screens
- Overall length EN 558
- Cylindrical screen must be ordered separately

d (mm)	DN (mm)	PN (bar)	EPDM Code	SP	Weight (kg)	FKM Code	SP	Weight (kg)
20	15	10	**163 305 302**	1	0.110	**163 305 317**	1	0.120
25	20	10	**163 305 303**	1	0.160	**163 305 318**	1	0.160
32	25	10	**163 305 304**	1	0.250	**163 305 319**	1	0.250
40	32	10	**163 305 305**	1	0.380	**163 305 320**	1	0.640
50	40	10	**163 305 306**	1	0.640	**163 305 321**	1	0.640
63	50	10	**163 305 307**	1	1.072	**163 305 322**	1	1.076

d (mm)	D (mm)	H (mm)	L (mm)	L1 (mm)	L2 (mm)	closest inch (inch)
20	43	65	124	130	28	½
25	54	76	144	150	37	¾
32	62	90	154	160	37	1
40	71	104	174	180	44	1 ¼
50	88	124	194	200	48	1 ½
63	103	148	224	230	60	2

Screen stainless steel
Screen perforation 0.5 mm

Model:

- Stainless Steel A4 Quality (AISI 316)
- For line strainers Type 305

d (mm)	DN (mm)	kv-value (Δp=1 bar) (l/min)	Code	D (mm)	L (mm)	closest inch (inch)
20	15	35	**161 486 100**	14	39	½
25	20	60	**161 486 101**	18	48	¾
32	25	85	**161 486 102**	24	60	1
40	32	130	**161 486 103**	30	71	1 ¼
50	40	200	**161 486 104**	38	87	1 ½
63	50	330	**161 486 105**	48	106	2
75	65	460	**161 486 106**	61	100	2 ½
90	80	665	**161 486 107**	73	118	3

PVC-C metric

silicon free/paint compatible

PVC-C - metric - slilicon free/paint compatible		Page
	Unions	133
	Silicone free	134
	Ball valves type 546 Pro	135
	Diaphragm valves type 317	136
	Cone check valves	137

Unions

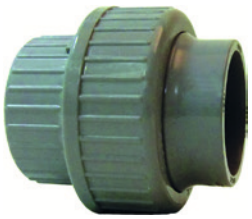

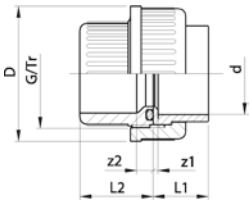

Union PVC-C metric silicone free

Model:

- Silicone free/paint-compatible
- Union End: PVC-C solvent socket metric
- Union bush: PVC-C solvent cement socket metric
- Gasket: with O-ring

d (mm)	Size (inch)	PN (bar)	EPDM Code	SP	Weight (kg)	FKM Code	SP	Weight (kg)
16		16	**723 510 155**	1	0.028	**723 510 180**	1	0.028
20		16	**723 510 156**	1	0.046	**723 510 181**	1	0.046
25		16	**723 510 157**	1	0.071	**723 510 182**	1	0.071
32		16	**723 510 158**	1	0.099	**723 510 183**	1	0.099
40		16	**723 510 159**	1	0.190	**723 510 184**	1	0.190
50		16	**723 510 160**	1	0.240	**723 510 185**	1	0.240
63		16	**723 510 161**	1	0.425	**723 510 186**	1	0.425
75	2 ½	10	**723 510 162**	1	0.670	**723 510 187**	1	0.670
90		10	**723 510 163**	1	1.008	**723 510 188**	1	1.008
110		10	**723 510 164**	1	1.553	**723 510 189**	1	1.553

d (mm)	D (mm)	L1 (mm)	L2 (mm)	z1 (mm)	z2 (mm)	G/Tr (inch)
16	35	19	24	3	8	3/4
20	43	21	26	3	9	1
25	53	24	29	3	9	1 1/4
32	60	27	33	3	9	1 1/2
40	74	32	39	3	10	2
50	83	33	46	3	10	2 1/4
63	103	40	58	3	10	2 3/4
75	135	47	62	3	18	Tr108x5
90	158	56	69	5	18	Tr128x5
110	188	66	72	5	11	Tr154x6

Silicone free

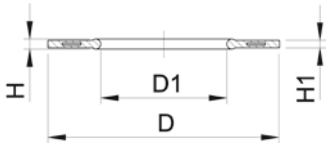

Profile Flange Gasket, metric
MPTFE envelope / EPDM inside

Model:

- For all metric GF Flange Adaptors
- Centering on the inner diameter of the bolt circle
- Envelope made of modified PTFE with diffusion barrier
- Ideal for aggressive media, High-Purity and silicone-free / paint compatible (acc. VDMA test)
- EPDM Profile Flange Gasket inside
- Individually bagged
- Suitable for contact with food stuff (conform to FDA 21 § 177.1550)

d (mm)	DN (mm)	PN (bar)	MPTFE/ EPDM Code	D (mm)	D1 (mm)	di FA (mm)	H (mm)	H1 (mm)
20	15	16	**747 440 706**	51	20	10 - 20	4	3
25	20	16	**747 440 707**	61	22	12 - 22	4	3
32	25	16	**747 440 708**	71	28	18 - 28	4	3
40	32	16	**747 440 709**	82	40	30 - 40	4	3
50	40	16	**747 440 710**	92	46	36 - 46	4	3
63	50	16	**747 440 711**	107	58	48 - 58	5	4
75	65	16	**747 440 712**	127	69	59 - 69	5	4
90	80	16	**747 440 713**	142	84	73 - 84	5	4
110	100	16	**747 440 714**	162	104	94 - 104	6	5
125	100	16	**747 440 715**	162	123	113 - 123	6	5
140	125	16	**747 440 716**	192	137	127 - 137	6	5
160 - 180	150	16	**747 440 717**	218	160	150 - 160	8	6
200	200	16	**747 440 719**	273	203	192 - 203	8	6
225	200	16	**747 440 720**	273	220	207 - 220	8	6
250	250	16	**747 440 721**	328	252	238 - 252	8	6
280	250	16	**747 440 722**	328	274	264 - 274	8	6
315	300	16	**747 440 723**	378	306	296 - 306	8	6
355	350	16	**747 440 724**	438	355	340 - 355	10	7
400	400	16	**747 440 725**	489	400	385 - 400	10	7

Ball valves type 546 Pro

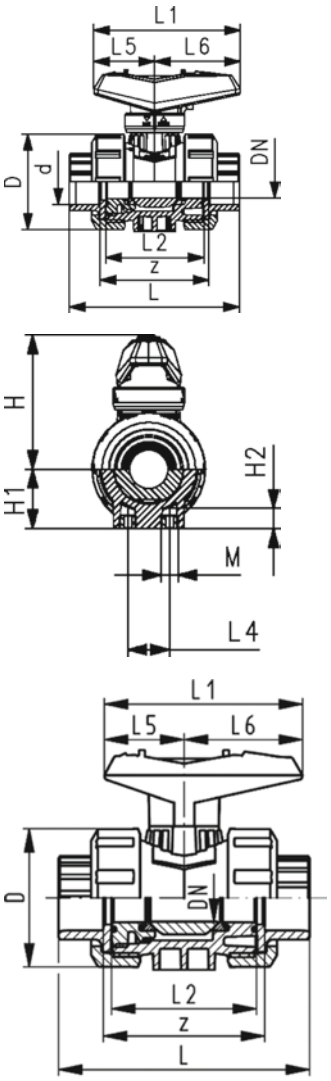

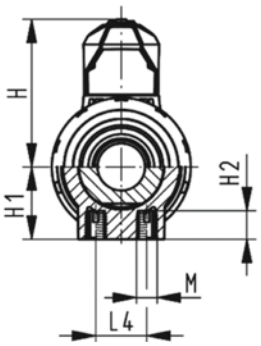

Ball valve type 546 Pro PVC-C silicone free
With solvent cement sockets Inch ASTM

Model:

- Silicon free
- Lockable lever as standard (DN10-DN50)
- For easy installation and removal
- Ball seat PVDF
- Integrated stainless steel mounting inserts
- Z-dimension, valve end and union nut **are compatible** with type 546 (1st Generation)

Option:

- Interface-module with position feedback sensor, incl. LED feedback (DN10-50)
- Manual spring return lever ("Dead man") (DN10-25)
- Pneumatic or electric actuators from GF
- Individual configuration of the valve possible
- Multifunctional module with integrated limit switches (DN65-100)

d (mm)	DN (mm)	Size (inch)	PN (bar)	kv-value (Δp=1 bar) (l/min)	EPDM Code	SP	Weight (kg)	FKM Code	SP	Weight (kg)
20	15	½	16	185	**163 546 842**	1	0.164	**163 546 852**	1	0.164
25	20	¾	16	350	**163 546 843**	1	0.249	**163 546 853**	1	0.249
32	25	1	16	700	**163 546 844**	1	0.369	**163 546 854**	1	0.369
40	32	1 ¼	16	1000	**163 546 845**	1	0.670	**163 546 855**	1	0.670
50	40	1 ½	16	1600	**163 546 846**	1	0.900	**163 546 856**	1	0.900
63	50	2	16	3100	**163 546 847**	1	1.660	**163 546 857**	1	1.660
75	65	2 ½	16	5000	**800 073 483**	1	6.000	**163 546 698**	1	5.300
90	80	3	16	7000	**800 062 444**	1	8.600	**163 546 699**	1	7.900
110	100	4	16	11000	**800 073 484**	1	13.800	**163 546 700**	1	12.600

D (mm)	H (mm)	H1 (mm)	H2 (mm)	L (mm)	L1 (mm)	L2 (mm)	L4 (mm)	L5 (mm)	L6 (mm)	M	z (mm)
50	57	27	12	95	82	56	25	35	47	6	67
58	74	30	12	110	106	65	25	44	62	M6	76
68	80	36	12	123	106	71	25	44	62	6	82
84	95	44	15	146	131	85	45	57	74	M8	98
97	102	51	15	157	131	89	45	57	74	M8	99
124	117	64	15	183	152	101	45	66	86	M8	111
166	150	85	15	233	270	136	70	64	206	M8	148
200	161	105	15	255	270	141	70	64	206	M8	163
238	178	123	22	301	320	164	120	64	256	M12	178

Diaphragm valves type 317

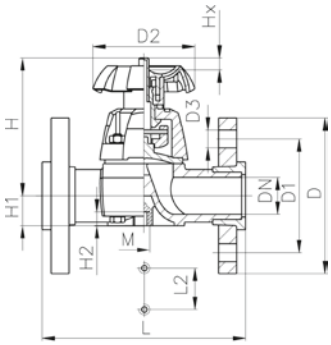

DN 15–65

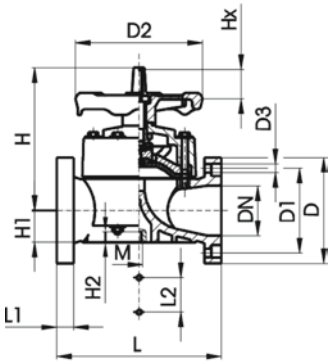

DN 80-100

Diaphragm valve type 317 PVC-C silicone free
With flanges

Model:

- Silicone free/paint-compatible
- Flat sealing faces
- DN 15-65 with backing flange
- DN 80-150 with fixed flange
- Overall length according to EN 558

Option:

- Handwheel lockable DN15-65 (basic version not lockable)

*** DN80 and DN150 fixed flanges metric and inch ANSI B16.5**

	d (mm)	DN (mm)	Size (inch)	PN (bar)	kv-value (Δp=1 bar) (l/min)	EPDM Code	Weight (kg)	PTFE with EPDM supp. Diaphragm Code	Weight (kg)
	75	65	2 ½	10	992	**163 317 723**	4.425	**163 317 738**	4.425
*	90	80	3	10	1700	**163 317 724**	9.750	**163 317 739**	9.750
	110	100	4	6	2700	**163 317 725**	13.600	**163 317 740**	13.600

	d (mm)	D (mm)	D1 (mm)	D2 (mm)	D3 (mm)	H (mm)	H1 (mm)	H2 (mm)	L (mm)	L1 (mm)	L2 (mm)	M	AL
	75	185	145	152	18	201	46	15	290		70	M8	4
*	90	200	160	270	18	265	57	23	310	35	120	M12	8
	110	225	180	270	18	304	69	23	350	35	120	M12	8

Cone check valves

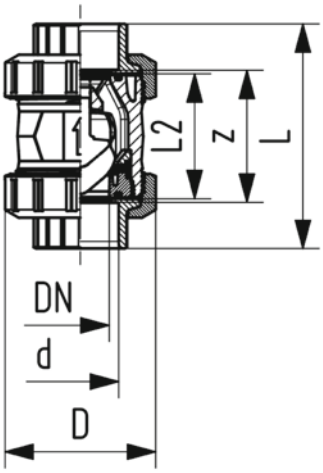

Check valve type 562 PVC-C silicone free
With solvent cement sockets metric

Model:

- For horizontal or vertical installation
- Sealing at a minimum water column of 1 m
- Silicone free/paint-compatible
- Spring loaded, spring made of stainless steel (1.4310)
- Spring available in other materials, see spare parts
- Designed for easy installation and removal
- Vibration free even at high flow velocity
- Flow-optimized return cone, double guided
- Compact installation length, same as ball valve type 546
- Z-length, end connectors and union nuts **not** compatible with type 360
- New DN65-DN100

d (mm)	DN (mm)	PN (bar)	kv-value (Δp=1 bar) (l/min)	EPDM Code	SP	Weight (kg)	FKM Code	SP	Weight (kg)
16	10	16	190	**163 562 201**	1	0.120	**163 562 211**	1	0.120
20	15	16	180	**163 562 202**	1	0.120	**163 562 212**	1	0.120
25	20	16	380	**163 562 203**	1	0.260	**163 562 213**	1	0.280
32	25	16	460	**163 562 204**	1	0.280	**163 562 214**	1	0.280
40	32	16	850	**163 562 205**	1	0.490	**163 562 215**	1	0.490
50	40	16	1080	**163 562 206**	1	0.710	**163 562 216**	1	0.710
63	50	16	1670	**163 562 207**	1	1.460	**163 562 217**	1	1.470
75	65	16	2950	**163 562 208**	1	3.460	**163 562 218**	1	3.480
90	80	16	3600	**163 562 209**	1	5.540	**163 562 219**	1	5.570
110	100	16	4150	**163 562 210**	1	8.930	**163 562 220**	1	8.970

d (mm)	D (mm)	L (mm)	L2 (mm)	z (mm)	closest inch (inch)
16	50	92	56	64	⅜
20	50	95	56	64	½
25	58	110	65	72	¾
32	68	123	71	79	1
40	84	146	85	94	1 ¼
50	97	157	89	95	1 ½
63	124	183	101	107	2
75	166	233	136	144	2 ½
90	200	254	141	151	3
110	238	301	164	174	4

PVC-C
ASTM / ANSI / BS

PVC-C - ASTM / ANSI / BS		Page
	Unions	142
	Ball valves type 543 Pro	143
	Ball valves type 546 Pro	147
	Ball valves electric type 104	150
	Butterfly valves type 578	152
	Butterfly valves pneumatic type 244	155
	Butterfly valves electric type 147	161
	Diaphragm valves type 317	163
	Diaphragm valves type 514	164
	Diaphragm valves type 517	165
	Diaphragm valves pneumatic DIASTAR Six	167
	Diaphragm valves pneumatic DIASTAR Ten	169
	Diaphragm valves pneumatic DIASTAR TenPlus	175
	Diaphragm valves DIASTAR big dimensions	177

PVC-C - ASTM / ANSI / BS		Page
	Pressure reducing valves type 582	181
	Pressure retaining valves type 586	183
	Process control valves	184
	Cone check valves	185

Unions

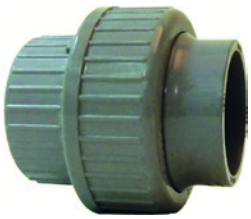

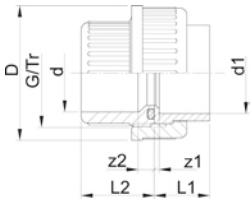

Adaptor union PVC-C metric ASTM

Model:

- Union End: PVC-C solvent cement socket inch ASTM
- Union bush: PVC-C solvent cement socket metric
- Gasket: O-ring EPDM code no. 748 410 005-011
- Gasket: O-ring FKM code no. 749 410 005-011

d (mm)	PN (bar)	d1 (inch)	EPDM Code	SP	Weight (kg)	FKM Code	SP	Weight (kg)
16	10	3/8	**723 514 105**	10	0.022	**723 514 130**	1	0.022
20	10	1/2	**723 514 106**	10	0.047	**723 514 131**	1	0.047
25	10	3/4	**723 514 107**	10	0.065	**723 514 132**	1	0.065
32	10	1	**723 514 108**	10	0.103	**723 514 133**	1	0.093
40	10	1 1/4	**723 514 109**	10	0.174	**723 514 134**	1	0.161
50	10	1 1/2	**723 514 110**	5	0.239	**723 514 135**	1	0.226
63	10	2	**723 514 111**	5	0.435	**723 514 136**	1	0.372

d (mm)	z1 (mm)	z2 (mm)	D (mm)	L1 (mm)	L2 (mm)	G (inch)
16	19	14	35	22	25	3/4
20	20	16	43	25	26	1
25	25	19	51	28	29	1 1/4
32	29	22	58	31	33	1 1/2
40	32	26	74	35	39	2
50	35	31	83	38	46	2 1/4
63	38	37	100	41	58	2 3/4

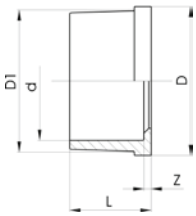

Union end PVC-C ASTM

Model:

- For union 723 510 105-114
- With solvent cement socket ASTM

PN (bar)	d1 (inch)	Code	SP	Weight (kg)	z (mm)	D (mm)	D1 (mm)	L (mm)
16	3/8	**723 602 005**	500	0.006	3	24	22	22
16	1/2	**723 602 006**	500	0.013	3	30	28	25
16	3/4	**723 602 007**	1200	0.016	3	39	36	28
16	1	**723 602 008**	650	0.025	3	45	42	32
16	1 1/4	**723 602 009**	210	0.040	3	57	53	35
16	1 1/2	**723 602 010**	380	0.049	3	63	59	38
16	2	**723 602 011**	250	0.080	3	78	74	41
16	2 1/2	**723 602 012**	20	0.169	3	101	91	47
16	3	**723 602 013**	50	0.275	5	121	108	56
16	4	**723 602 014**	25	0.420	5	146	131	66

Ball valves type 543 Pro

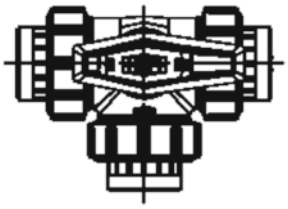

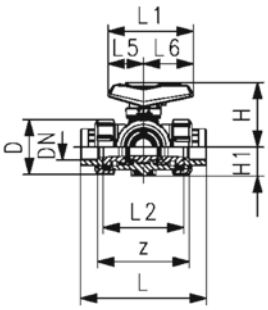

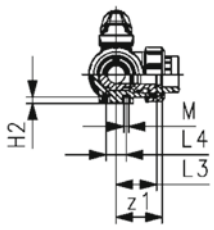

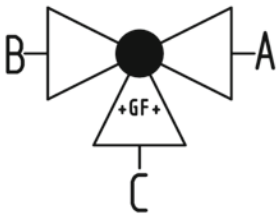

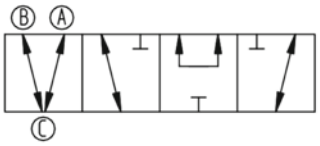

3-Way ball valve type 543 Pro PVC-C
Horizontal/T-port
With threaded sockets NPT

Model:

- Lockable lever as standard (DN10-DN50)
- For easy installation and removal (valve end and union nut are compatible with type 546)
- Ball seat PTFE
- Angle of operation 360° without turn limiter
- Turn limiter 90° enclosed, in different positions usable as a clip-on ring
- Integrated stainless steel mounting inserts
- Delivery status A-B-C opened, see flow scheme
- Z-dimension, valve end and union nut are compatible with type 543 (1stGeneration)

Option:

- Interface-module with position feedback sensor, incl. LED feedback (DN10-50)
- Manual spring return lever ("Dead man") (DN10-25)
- Pneumatic or electric actuators from GF
- Individual configuration of the valve possible

d (mm)	DN (mm)	Thread Type	Size (inch)	PN (bar)	kv-value (Δp=1 bar) (l/min)	EPDM Code	SP	Weight (kg)
16	10	NPT	⅜	10	140	**163 543 301**	1	0.264
20	15	NPT	½	10	200	**163 543 302**	1	0.271
25	20	NPT	¾	10	470	**163 543 303**	1	0.389
32	25	NPT	1	10	793	**163 543 304**	1	0.590
40	32	NPT	1 ¼	10	1290	**163 543 305**	1	1.007
50	40	NPT	1 ½	10	1910	**163 543 306**	1	1.487
63	50	NPT	2	10	3100	**163 543 307**	1	2.889

FKM Code	SP	Weight (kg)
163 543 311	1	0.264
163 543 312	1	0.271
163 543 313	1	0.389
163 543 314	1	0.590
163 543 315	1	1.007
163 543 316	1	1.487
163 543 317	1	2.889

D (mm)	H (mm)	H1 (mm)	H2 (mm)	L (mm)	L1 (mm)	L2 (mm)	L3 (mm)	L4 (mm)	L5 (mm)	L6 (mm)	M	z (mm)	z1 (mm)
50	61	28	8	115	82	73	36	25	35	47	6	87	43
50	61	28	8	114	82	73	36	25	35	47	6	81	40
58	74	32	8	131	106	86	43	25	44	62	6	96	48
68	80	36	8	155	106	99	50	25	44	62	6	111	56
84	95	45	9	181	131	120	60	45	57	74	8	134	67
97	102	51	9	205	131	137	69	45	57	74	8	159	80
124	117	65	9	261	152	179	89	45	66	86	8	213	106

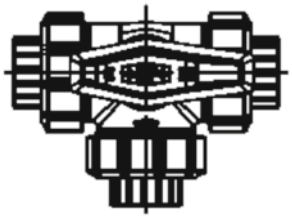

3-Way ball valve type 543 Pro PVC-C
Horizontal/T-port
With solvent cement sockets ASTM

Model:

- Lockable lever as standard (DN10-DN50)
- For easy installation and removal (valve end and union nut are compatible with type 546)
- Ball seat PTFE
- Angle of operation 360° without turn limiter
- Turn limiter 90° enclosed, in different positions usable as a clip-on ring
- Integrated stainless steel mounting inserts
- Delivery status A-B-C opened, see flow scheme
- Z-dimension, valve end and union nut are compatible with type 543 (1stGeneration)

Option:

- Interface-module with position feedback sensor, incl. LED feedback (DN10-50)
- Manual spring return lever ("Dead man") (DN10-25)
- Pneumatic or electric actuators from GF
- Individual configuration of the valve possible

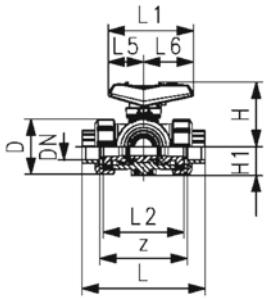

d (mm)	DN (mm)	Size (inch)	PN (bar)	kv-value (Δp=1 bar) (l/min)	EPDM Code	SP	Weight (kg)	FKM Code	SP	Weight (kg)
16	10	⅜	10	140	**163 543 281**	1	0.264	**163 543 291**	1	0.264
20	15	½	10	200	**163 543 282**	1	0.271	**163 543 292**	1	0.271
25	20	¾	10	470	**163 543 283**	1	0.389	**163 543 293**	1	0.389
32	25	1	10	793	**163 543 284**	1	0.590	**163 543 294**	1	0.590
40	32	1 ¼	10	1290	**163 543 285**	1	1.007	**163 543 295**	1	1.007
50	40	1 ½	10	1910	**163 543 286**	1	1.458	**163 543 296**	1	1.487
63	50	2	10	3100	**163 543 287**	1	2.889	**163 543 297**	1	2.889

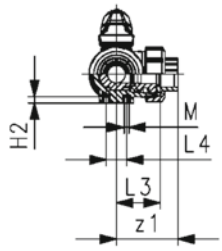

D (mm)	H (mm)	H1 (mm)	H2 (mm)	L (mm)	L1 (mm)	L2 (mm)	L3 (mm)	L4 (mm)	L5 (mm)	L6 (mm)	M	z (mm)	z1 (mm)
50	61	28	8	123	82	73	36	25	35	47	6	85	42
50	61	28	8	122	82	73	36	25	35	47	6	77	38
58	74	32	8	141	106	86	43	25	44	62	6	92	46
68	80	36	8	161	106	99	50	25	44	62	6	105	53
84	95	45	9	187	131	120	60	45	57	74	8	126	63
97	102	51	9	213	131	137	69	45	57	74	8	143	72
124	117	65	9	261	152	179	89	45	66	86	8	185	92

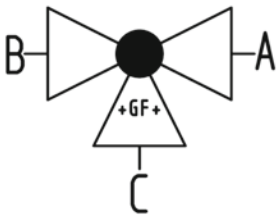

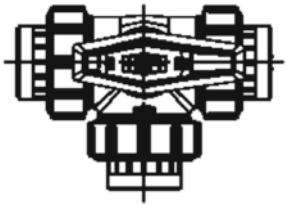

3-Way ball valve type 543 Pro PVC-C
Horizontal/L-port
With threaded sockets NPT

Model:

- Lockable lever as standard (DN10-DN50)
- For easy installation and removal (valve end and union nut are compatible with type 546)
- Ball seat PTFE
- Angle of operation 360° without turn limiter
- Turn limiter 90° enclosed, in different positions usable as a clip-on ring
- Integrated stainless steel mounting inserts
- Delivery status A-C opened, see flow scheme
- Z-dimension, valve end and union nut are compatible with type 543 (1stGeneration)

Option:

- Interface-module with position feedback sensor, incl. LED feedback (DN10-50)
- Manual spring return lever ("Dead man") (DN10-25)
- Pneumatic or electric actuators from GF
- Individual configuration of the valve possible

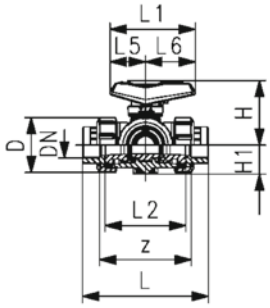

d (mm)	DN (mm)	Thread Type	Size (inch)	PN (bar)	kv-value (Δp=1 bar) (l/min)	EPDM Code	SP	Weight (kg)
16	10	NPT	⅜	10	50	**163 543 101**	1	0.265
20	15	NPT	½	10	75	**163 543 102**	1	0.272
25	20	NPT	¾	10	150	**163 543 103**	1	0.391
32	25	NPT	1	10	280	**163 543 104**	1	0.598
40	32	NPT	1 ¼	10	480	**163 543 105**	1	1.018
50	40	NPT	1 ½	10	620	**163 543 106**	1	1.509
63	50	NPT	2	10	1230	**163 543 107**	1	2.938

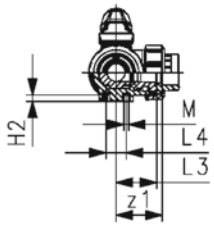

FKM Code	SP	Weight (kg)
163 543 111	1	0.265
163 543 112	1	0.272
163 543 113	1	0.391
163 543 114	1	0.598
163 543 115	1	1.018
163 543 116	1	1.509
163 543 117	1	2.938

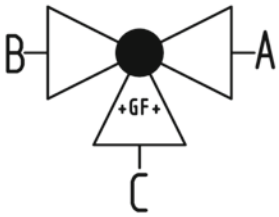

D (mm)	H (mm)	H1 (mm)	H2 (mm)	L (mm)	L1 (mm)	L2 (mm)	L3 (mm)	L4 (mm)	L5 (mm)	L6 (mm)	M	z (mm)	z1 (mm)
50	61	28	8	115	82	73	36	25	35	47	6	87	43
50	61	28	8	114	82	73	36	25	35	47	6	81	40
58	74	32	8	131	106	86	43	25	44	62	6	96	48
68	80	36	8	155	106	99	50	25	44	62	6	111	56
84	95	45	9	181	131	120	60	45	57	74	8	134	67
97	102	51	9	205	131	137	69	45	57	74	8	159	80
124	117	65	9	261	152	179	89	45	66	86	8	213	106

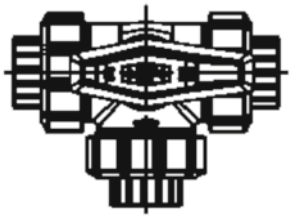

3-Way ball valve type 543 Pro PVC-C
Horizontal/L-port
With solvent cement sockets ASTM

Model:

- Lockable lever as standard (DN10-DN50)
- For easy installation and removal (valve end and union nut are compatible with type 546)
- Ball seat PTFE
- Angle of operation 360° without turn limiter
- Turn limiter 90° enclosed, in different positions usable as a clip-on ring
- Integrated stainless steel mounting inserts
- Delivery status A-C opened, see flow scheme
- Z-dimension, valve end and union nut are compatible with type 543 (1stGeneration)

Option:

- Interface-module with position feedback sensor, incl. LED feedback (DN10-50)
- Manual spring return lever ("Dead man") (DN10-25)
- Pneumatic or electric actuators from GF
- Individual configuration of the valve possible

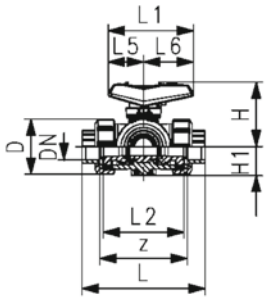

d (mm)	DN (mm)	Size (inch)	PN (bar)	kv-value (Δp=1 bar) (l/min)	EPDM Code	SP	Weight (kg)	FKM Code	SP	Weight (kg)
16	10	⅜	10	50	**163 543 081**	1	0.265	**163 543 091**	1	0.265
20	15	½	10	75	**163 543 082**	1	0.272	**163 543 092**	1	0.272
25	20	¾	10	150	**163 543 083**	1	0.391	**163 543 093**	1	0.391
32	25	1	10	280	**163 543 084**	1	0.598	**163 543 094**	1	0.598
40	32	1 ¼	10	480	**163 543 085**	1	1.018	**163 543 095**	1	1.018
50	40	1 ½	10	620	**163 543 086**	1	1.480	**163 543 096**	1	1.496
63	50	2	10	1230	**163 543 087**	1	2.938	**163 543 097**	1	2.938

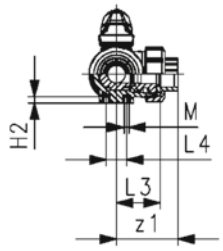

D (mm)	H (mm)	H1 (mm)	H2 (mm)	L (mm)	L1 (mm)	L2 (mm)	L3 (mm)	L4 (mm)	L5 (mm)	L6 (mm)	M	z (mm)	z1 (mm)
50	61	28	8	123	82	73	36	25	35	47	6	85	42
50	61	28	8	122	82	73	36	25	35	47	6	77	38
58	74	32	8	141	106	86	43	25	44	62	6	92	46
68	80	36	8	161	106	99	50	25	44	62	6	105	53
84	95	45	9	187	131	120	60	45	57	74	8	126	63
97	102	51	9	213	131	137	69	45	57	74	8	143	72
124	117	65	9	261	152	179	89	45	66	86	8	185	92

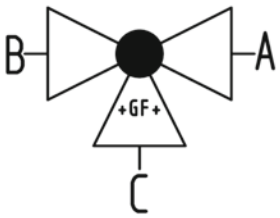

Ball valves type 546 Pro

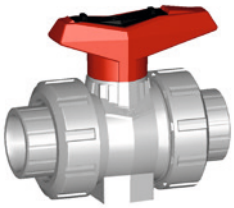

DN10/15 - 50

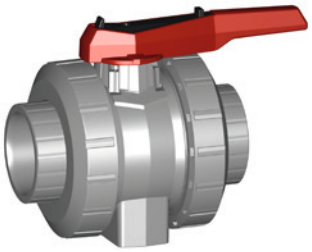

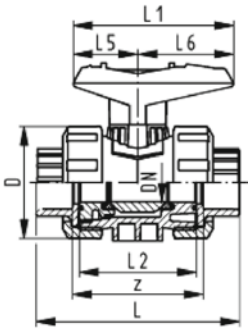

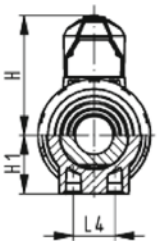

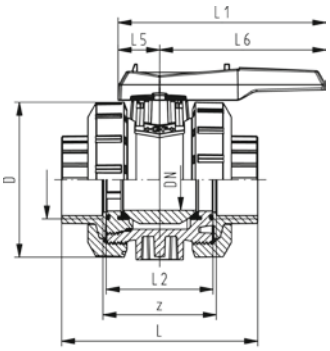

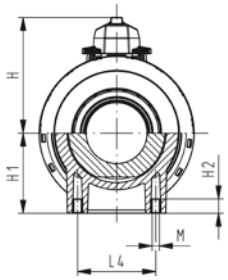

Ball valve type 546 PVC-C
With solvent cement sockets Inch ASTM
Including 2 threaded union ends NPT

Model:

- For easy installation and removal
- Ball seat PTFE
- Without mounting inserts
- Threaded valve ends are only enclosed for DN10/15-50
- Valve end and union nut are **not compatible** with type 346 (DN10/15-50) and type 370 (DN65-100)

Option:

- Individual configuration of the valve
- Multifunctional module with integrated limit switches
- Pneumatic or electric actuators from GF

Size (inch)	DN (mm)	PN (bar)	kv-value (Δp=1 bar) (l/min)	EPDM Code	SP	Weight (kg)	FKM Code	SP	Weight (kg)
⅜	10	16	71	**163 546 301**	1	0.190	**163 546 311**	1	0.190
½	15	16	185	**163 546 302**	1	0.242	**163 546 312**	1	0.244
¾	20	16	350	**163 546 303**	1	0.349	**163 546 313**	1	0.300
1	25	16	700	**163 546 304**	1	0.512	**163 546 314**	1	0.515
1 ¼	32	16	1000	**163 546 305**	1	0.651	**163 546 315**	1	0.800
1 ½	40	16	1600	**163 546 306**	1	1.158	**163 546 316**	1	0.905
2	50	16	3100	**163 546 307**	1	2.045	**163 546 317**	1	2.068
2 ½	65	16	5000	**163 546 308**	1	5.400	**163 546 318**	1	3.871
3	80	16	7000	**163 546 309**	1	5.809	**163 546 319**	1	8.100
4	100	16	11000	**163 546 310**	1	9.544	**163 546 320**	1	9.541

Size (inch)	D (mm)	H (mm)	H1 (mm)	L (mm)	L1 (mm)	L2 (mm)	L4 (mm)	L5 (mm)	L6 (mm)	z (mm)
⅜	50	57	27	105	77	56	25	32	45	67
½	50	57	27	105	77	56	25	32	45	61
¾	58	67	30	121	97	65	25	39	58	70
1	68	73	36	133	97	71	25	39	58	76
1 ¼	84	90	44	154	128	85	45	54	74	90
1 ½	97	97	51	164	128	89	45	54	74	94
2	124	116	64	183	152	101	45	66	87	107
2 ½	166	149	85	233	270	136	70	64	206	144
3	200	161	105	254	270	141	70	64	206	151
4	238	178	123	301	320	164	120	64	256	174

PVC-C Ball Valve type 546 Pro
With solvent cement sockets PVC-C ASTM
Inclusive 2 threaded union ends NPT

Model:

- Lockable lever as standard
- Ball seat PTFE
- Integrated stainless steel mounting inserts
- z-dimension, valve end and union nut are compatible with type 546 (1st Generation)

Option:

- Interface module for position feedback sensor with LED (PNP, NPN and NAMUR)
- Manual spring return lever ("Dead man") (DN10-25)
- Pneumatic or electric actuators from GF
- Individual configuration of valves possible

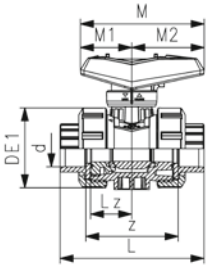

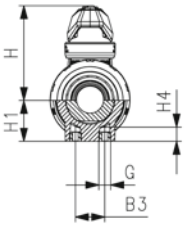

d (mm)	DN (mm)	Size (inch)	PN (bar)	kv-value (Δp=1 bar) (l/min)	EPDM Code	SP	Weight (kg)	FKM Code	SP	Weight (kg)
16	10	⅜	16	70	**163 546 341**	1	0.194	**163 546 351**	1	0.194
20	15	½	16	185	**163 546 342**	1	0.248	**163 546 352**	1	0.250
25	20	¾	16	350	**163 546 343**	1	0.358	**163 546 353**	1	0.267
32	25	1	16	700	**163 546 344**	1	0.517	**163 546 354**	1	0.520
40	32	1 ¼	16	1000	**163 546 345**	1	0.652	**163 546 355**	1	0.810
50	40	1 ½	16	1600	**163 546 346**	1	1.166	**163 546 356**	1	1.180
63	50	2	16	3100	**163 546 347**	1	2.055	**163 546 357**	1	2.078
75	65	2 ½	16	5000	**163 546 348**	1	5.400	**163 546 358**	1	5.400
90	80	3	16	7000	**163 546 349**	1	5.821	**163 546 359**	1	6.689
110	100	4	16	11000	**163 546 350**	1	12.800	**163 546 360**	1	12.800

d (mm)	B3 (mm)	DE1 (mm)	G (mm)	H (mm)	H1 (mm)	H4 (mm)	L (mm)	Lz (mm)	M (mm)	M1 (mm)	M2 (mm)	z (mm)
16	25	50	M6	60.5	27	12	92	28	82	35	47	64
20	25	50	M6	60.5	27	12	95	28	82	35	47	64
25	25	58	M6	74.0	30	12	110	33	106	44	62	72
32	25	68	M6	80.0	36	12	123	36	106	44	62	79
40	45	84	M8	95.0	44	15	146	43	131	57	74	94
50	45	97	M8	101.5	51	15	157	45	131	57	74	95
63	45	124	M8	116.5	64	15	183	51	152	66	86	107
75	70	166	M8	169.0	85	15	233	68	270	64	205	144
90	70	200	M8	180.0	105	15	254	71	270	64	205	151
110	120	238	M12	194.0	123	22	301	82	326	71	255	174

PVC-C Ball Valve type 546 Pro
With backing flanges PP-St Inch/ANSI

Model:

- Lockable lever as standard
- Ball seat PTFE
- Integrated stainless steel mounting inserts
- Z-dimension, valve end and union nut **are compatible** with type 546 (1st Generation)

Option:

- Interface module for position feedback sensor with LED (PNP, NPN and NAMUR)
- Manual spring return lever "Dead man" (DN10-25)
- Pneumatic or electric actuators from GF
- Individual configuration of valves possible

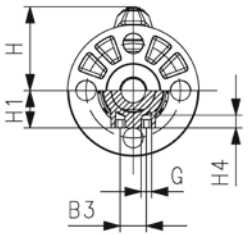

d (mm)	DN (mm)	Size (inch)	PN (bar)	kv-value (Δp=1 bar) (l/min)	EPDM Code	SP	Weight (kg)	FKM Code	SP	Weight (kg)
20	15	½	16	185	**800 024 423**	1	0.600	**800 059 402**	1	0.700
25	20	¾	16	350	**800 014 862**	1	0.760	**800 047 037**	1	0.700
32	25	1	16	700	**800 070 455**	1	0.800	**800 046 363**	1	1.200
40	32	1 ¼	16	1000	**800 070 456**	1	1.300	**800 070 458**	1	1.300
50	40	1 ½	16	1600	**800 063 570**	1	1.500	**800 047 209**	1	2.300
63	50	2	16	3100	**800 044 800**	1	1.695	**800 012 189**	1	3.580

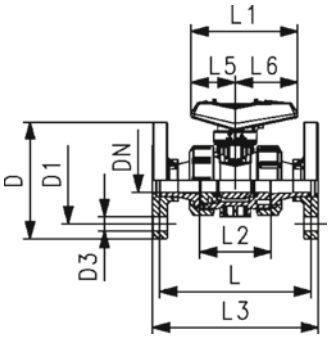

d (mm)	b1 (mm)	B3 (mm)	D1 (mm)	DE1 (mm)	G (mm)	H (mm)	H1 (mm)	H4 (mm)	k1 (mm)	L (mm)	Lz (mm)	M (mm)	M1 (mm)	M2 (mm)
20	12	25	95	50	M6	60.5	27	12	60	130	28	82	35	47
25	12	25	105	58	M6	74.0	30	12	70	150	33	106	44	62
32	14	25	115	68	M6	80.0	36	12	79	160	36	106	44	62
40	16	45	140	84	M8	95.0	44	15	89	180	43	131	57	74
50	16	45	150	97	M8	101.5	51	15	98	200	45	131	57	74
63	18	45	165	124	M8	116.5	64	15	121	230	51	152	66	86

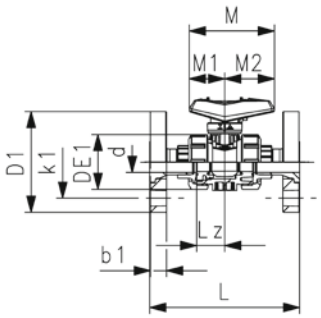

Ball valves electric type 104

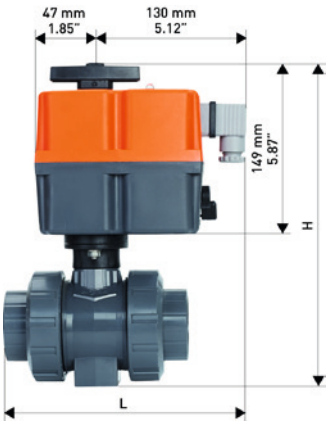

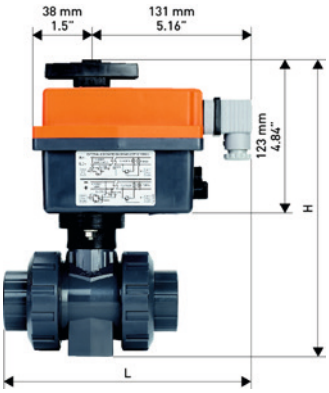

Ball valve type 104 PVC-C 24V
With solvent cement sockets Inch ASTM
Inclusive 2 threaded valve ends NPT

Model:

- Voltage according data sheet
- Control range 90°<)
- For easy installation and removal
- Integrated stainless steel mounting inserts

d (mm)	DN (mm)	Size (inch)	PN (bar)	kv-value (Δp=1 bar) (l/min)	Voltage	EPDM Code	SP	Weight (kg)	FKM Code
16	10	⅜	10	70	24V	**199 104 342**	1	0.995	**199 104 352**
20	15	½	10	185	24V	**199 104 343**	1	0.995	**199 104 353**
25	20	¾	10	350	24V	**199 104 344**	1	1.050	**199 104 354**
32	25	1	10	700	24V	**199 104 345**	1	1.120	**199 104 355**
40	32	1 ¼	10	1000	24V	**199 104 346**	1	1.290	**199 104 356**
	40		10	1600	24-240V	**199 104 347**	1	2.010	**199 104 357**
	50		10	3100	24-240V	**199 104 348**	1	2.395	**199 104 358**

H (mm)	L (mm)	Type of actuator	Inch (inch)	B (mm)
194	178.5	10Nm	3/8	50
194	178.5	10Nm	1/2	50
207	186.0	10Nm	3/4	58
217	192.5	10Nm	1	68
236	204.5	10Nm	1 1/4	84
275	208.5	20Nm	1 1/2	97
307	221.5	20Nm	2	124

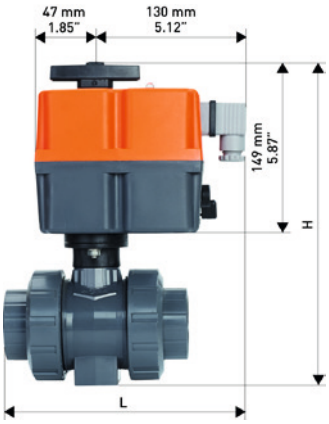

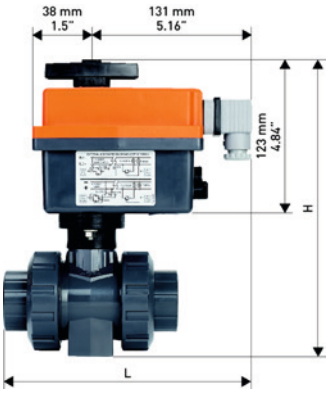

Ball valve type 104 PVC-C 100-230V
With solvent cement sockets Inch ASTM
Inclusive 2 threaded valve ends NPT

Model:

- Voltage according data sheet
- Control range 90°<)
- For easy installation and removal
- Integrated stainless steel mounting inserts

d (mm)	DN (mm)	Size (inch)	PN (bar)	kv-value (Δp=1 bar) (l/min)	Voltage	EPDM Code	SP	Weight (kg)	FKM Code
16	10	⅜	10	70	100-230V	**199 104 322**	1	0.995	**199 104 332**
20	15	½	10	185	100-230V	**199 104 323**	1	0.995	**199 104 333**
25	20	¾	10	350	100-230V	**199 104 324**	1	1.050	**199 104 334**
32	25	1	10	700	100-230V	**199 104 325**	1	1.120	**199 104 335**
40	32	1 ¼	10	1000	100-230V	**199 104 326**	1	1.290	**199 104 336**
50	40	1 ½	10	1600	24-240V	**199 104 347**	1	2.010	**199 104 357**
63	50	2	10	3100	24-240V	**199 104 348**	1	2.395	**199 104 358**

H (mm)	L (mm)	Type of actuator	Inch (inch)	B (mm)
194	178.5	10Nm	3/8	50
194	178.5	10Nm	1/2	50
207	186.0	10Nm	3/4	58

table continued on the next page

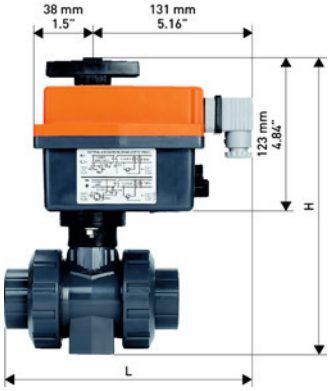

H (mm)	L (mm)	Type of actuator	Inch (inch)	B (mm)
217	192.5	10Nm	1	68
236	204.5	10Nm	1 1/4	84
275	208.5	20Nm	1 1/2	97
307	221.5	20Nm	2	124

Butterfly valves type 578

Lug-style end installation butterfly valve type 578 PVC-C
Bare shaft
Flange standard ANSI/ASME

Model:

- Housing material: PP-GF30 with SS316 lug-inserts
- Overall length according to EN 558, ISO 5752 (DN50 - 200 line 25, DN250 - 300 line 10)
- Connecting dimension ANSI/ASME B 16.5 Class 150
- Interface F07 according to DIN/ISO 5211
- Interface F10 for the dimensions DN250-300 according to DIN/ISO 5211

Option:

- Optional accessory: Valve-Integrated position feedback with limit switches (limit switches have to be ordered separately)

Note:

For some material combination (e.g. DN300 valves with PE/PP pipes) special flange adapters are needed. Please check the "Perfect flange connection tool" on www.gfps.com

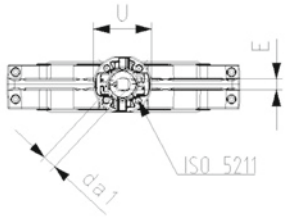

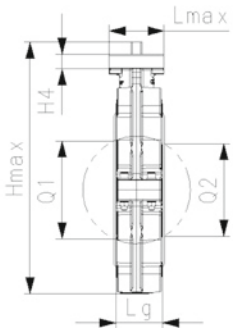

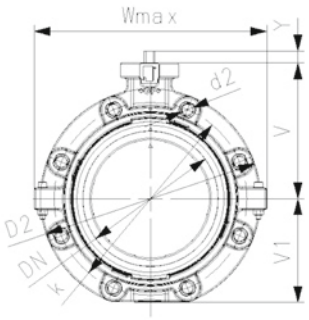

d (mm)	Size (inch)	DN (mm)	PN (bar)	kv-value (Δp=1 bar) (l/min)	EPDM Code	SP	Weight (kg)	FKM Code	SP	Weight (kg)
63	2	50	10	740	**163 578 902**	1	1.299	**163 578 922**	1	1.299
75	2 ½	65	10	1500	**163 578 903**	1	1.456	**163 578 923**	1	1.456
90	3	80	10	2400	**163 578 904**	1	1.701	**163 578 924**	1	1.701
110	4	100	10	3800	**163 578 905**	1	2.606	**163 578 925**	1	2.606
140	5	125	10	8600	**163 578 906**	1	4.120	**163 578 926**	1	4.120
160	6	150	10	11400	**163 578 907**	1	5.881	**163 578 927**	1	5.881
225	8	200	10	19900	**163 578 908**	1	7.125	**163 578 928**	1	7.125
280	10	250	10	34000	**163 578 909**	1	17.880	**163 578 929**	1	17.880
315	12	300	10	50000	**163 578 910**	1	24.416	**163 578 930**	1	24.416

d (mm)	Hmax (mm)	Lmax (mm)	Wmax (mm)	U (mm)	V (mm)	H4 (mm)	V1 (mm)	Lg (mm)	D2 (mm)	Q1 (mm)	Q2 (mm)	d2	da1 (mm)
63	238.3	84.8	159.5	90	133.3	23	78.8	44.7	160	40		UNC 5/8	13.5
75	251.2	84.8	166.1	90	139.9	23	85.1	45.7	180	54	35	UNC 5/8	13.5
90	263.0	84.8	171.8	90	145.6	23	91.2	48.7	195	67	50	UNC 5/8	13.5
110	288.9	84.8	181.4	90	166.0	23	107.5	55.6	226	88	74	UNC 5/8	17.3
140	318.1	84.8	195.4	90	180.0	23	122.7	63.5	258	113	97	UNC 3/4	17.3
160	341.9	84.8	207.4	90	189.0	23	134.5	71.5	284	139	123	UNC 3/4	21.1
225	390.4	84.8	228.9	90	210.5	23	161.5	72.5	341	178	169	UNC 3/4	21.1
280	511.5	125.0	304.6	125	264.4	23	206.9	113.2	412	210	207	UNC 7/8	27.0
315	560.9	125.0	325.4	125	285.2	23	235.5	114.6	482	256	253	UNC 7/8	27.0

Lug-style end installation butterfly valve type 578 PVC-C
With hand lever
Flange standard ANSI/ASME

Model:

- Housing material: PP-GF30 with SS316 lug-inserts
- Overall length according to EN 558, ISO 5752 (DN50 - 200 line 25, DN250 - 300 line 10)
- Connecting dimension ANSI/ASME B 16.5 Class 150
- We recommend for the dimensions DN250 and DN300 only 6 bar maximum system pressure for the hand lever version

Option:

- Optional accessory: Valve-Integrated position feedback with limit switches (limit switches have to be ordered separately)

Note:

For some material combination (e.g. DN300 valves with PE/PP pipes) special flange adapters are needed. Please check the "Perfect flange connection tool" on www.gfps.com

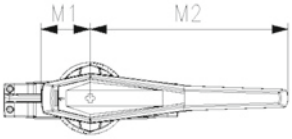

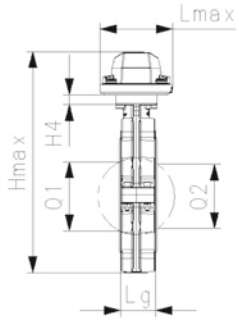

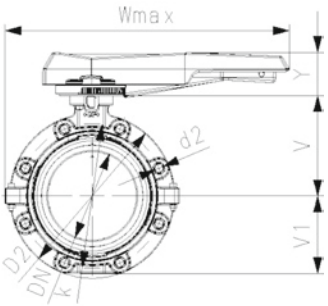

d (mm)	Size (inch)	DN (mm)	PN (bar)	kv-value (Δp=1 bar) (l/min)	EPDM Code	SP	Weight (kg)	FKM Code	SP	Weight (kg)
63	2	50	10	740	**163 578 102**	1	1.800	**163 578 122**	1	1.800
75	2 ½	65	10	1500	**163 578 103**	1	1.895	**163 578 123**	1	1.895
90	3	80	10	2400	**163 578 104**	1	2.251	**163 578 124**	1	2.251
110	4	100	10	3800	**163 578 105**	1	3.146	**163 578 125**	1	3.146
140	5	125	10	8600	**163 578 106**	1	4.660	**163 578 126**	1	4.660
160	6	150	10	11400	**163 578 107**	1	6.430	**163 578 127**	1	6.430
225	8	200	10	19900	**163 578 108**	1	8.625	**163 578 128**	1	8.625
280	10	250	6	34000	**163 578 109**	1	19.528	**163 578 129**	1	19.528
315	12	300	6	50000	**163 578 110**	1	26.106	**163 578 130**	1	26.106

d (mm)	Hmax (mm)	Lmax (mm)	Wmax (mm)	U (mm)	V (mm)	H4 (mm)	V1 (mm)	Lg (mm)	D2 (mm)	Q1 (mm)	Q2 (mm)	d2	M1 (mm)
63	278.9	115.2	287.8	90	133.3	23	78.8	44.7	160	40		UNC 5/8	63.7
75	291.8	115.2	296.3	90	139.9	23	85.1	45.7	180	54	35	UNC 5/8	63.7
90	303.6	115.2	310.3	90	145.6	23	91.2	48.7	195	67	50	UNC 5/8	63.7
110	343.6	115.2	375.2	90	166.0	23	107.5	55.6	226	88	74	UNC 5/8	63.7
140	372.8	115.2	391.2	90	180.0	23	122.7	63.5	258	113	97	UNC 3/4	63.7
160	393.6	115.2	395.2	90	189.0	23	134.5	71.5	284	139	123	UNC 3/4	63.7
225	458.1	149.4	588.1	90	210.5	23	161.5	72.5	341	178	169	UNC 3/4	101.7
280	557.6	149.4	628.1	125	264.4	23	206.9	113.2	412	210	207	UNC 7/8	101.7
315	607.0	149.4	663.1	125	285.2	23	235.5	114.6	482	256	253	UNC 7/8	101.7

d (mm)	M2 (mm)
63	205.6
75	205.6
90	205.6
110	255.2
140	255.2
160	255.2
225	408.1
280	408.1
315	408.1

Lug-style end installation butterfly valve type 578 PVC-C
With gear box
Flange standard ANSI/ASME

Model:

- Housing material: PP-GF30 with SS316 lug-inserts
- Overall length according to EN 558, ISO 5752 (DN50 - 200 line 25, DN250 - 300 line 10)
- Connecting dimension ANSI/ASME B 16.5 Class 150

Option:

- Optional accessory: Valve-Integrated position feedback with limit switches (limit switches have to be ordered separately)

Note:

For some material combination (e.g. DN300 valves with PE/PP pipes) special flange adapters are needed. Please check the "Perfect flange connection tool" on www.gfps.com

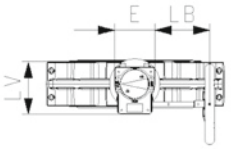

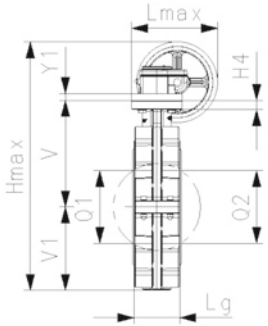

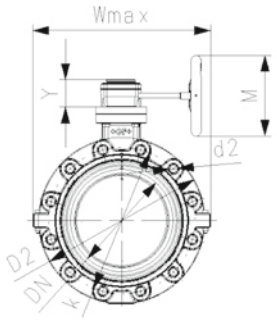

d (mm)	Size (inch)	DN (mm)	PN (bar)	kv-value (Δp=1 bar) (l/min)	EPDM Code	SP	Weight (kg)	FKM Code	SP	Weight (kg)
63	2	50	10	740	**163 578 142**	1	3.535	**163 578 162**	1	3.535
75	2 ½	65	10	1500	**163 578 143**	1	3.698	**163 578 163**	1	3.698
90	3	80	10	2400	**163 578 144**	1	3.929	**163 578 164**	1	3.929
110	4	100	10	3800	**163 578 145**	1	4.834	**163 578 165**	1	4.834
140	5	125	10	8600	**163 578 146**	1	6.348	**163 578 166**	1	6.348
160	6	150	10	11400	**163 578 147**	1	8.109	**163 578 167**	1	8.109
225	8	200	10	19900	**163 578 148**	1	9.353	**163 578 168**	1	9.353
280	10	250	10	34000	**163 578 149**	1	21.210	**163 578 169**	1	21.210
315	12	300	10	50000	**163 578 150**	1	27.746	**163 578 170**	1	27.746

d (mm)	Hmax (mm)	Lmax (mm)	Wmax (mm)	U (mm)	V (mm)	H4 (mm)	V1 (mm)	Lg (mm)	D2 (mm)	Q1 (mm)	Q2 (mm)	d2	Y (mm)
63	319.4	169.1	263.5	90	133.3	23	78.8	44.7	160	40		UNC 5/8	61.2
75	332.3	169.1	272.0	90	139.9	23	85.1	45.7	180	54	35	UNC 5/8	61.2
90	344.1	169.1	286.0	90	145.6	23	91.2	48.7	195	67	50	UNC 5/8	61.2
110	380.8	169.1	301.0	90	166.0	23	107.5	55.6	226	88	74	UNC 5/8	61.2
140	410.0	169.1	317.0	90	180.0	23	122.7	63.5	258	113	97	UNC 3/4	61.2
160	430.8	169.1	321.0	90	189.0	23	134.5	71.5	284	139	123	UNC 3/4	61.2
225	479.3	169.1	360.0	90	210.5	23	161.5	72.5	341	178	169	UNC 3/4	61.2
280	615.6	212.6	440.0	125	264.4	23	206.9	113.2	412	210	207	UNC 7/8	68.4
315	665.0	212.6	510.0	125	285.2	23	235.5	114.6	482	256	253	UNC 7/8	68.4

d (mm)	E (mm)	Y1 (mm)	M (mm)	LV (mm)	LB (mm)
63	80		160	112.3	129.5
75	80		160	112.3	129.5
90	80		160	112.3	129.5
110	80		160	112.3	129.5
140	80		160	112.3	129.5
160	80		160	112.3	129.5
225	80		160	112.3	129.5
280	100	17	200	130.0	134.0
315	100	17	200	130.0	134.0

Butterfly valves pneumatic type 244

Lug-style end installation butterfly valve type 244 PVC-C
With pneumatic actuator - fail safe to close (FC)
Without manual override
Flange standard ANSI/ASME

Model:

- Housing material: PP-GF30 with SS316 lug-inserts
- Control range 90°<)
- Overall length according to EN 558, ISO 5752 (DN50 - 200 line 25, DN250 - 300 line 10)
- Connecting dimension ANSI/ASME B 16.5 Class 150

Option:

- Optional accessory: Valve-Integrated position feedback with limit switches (limit switches have to be ordered separately)

Note:

For some material combination (e.g. DN300 valves with PE/PP pipes) special flange adapters are needed. Please check the "Perfect flange connection tool" on www.gfps.com

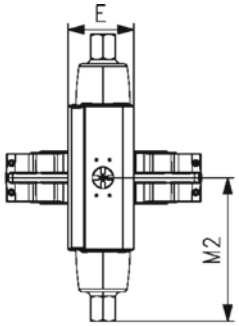

d (mm)	Size (inch)	DN (mm)	PN (bar)	kv-value (Δp=1 bar) (l/min)	EPDM Code	SP	Weight (kg)	FKM Code	SP	Weight (kg)
63	2	50	10	740	**199 244 162**	1	3.499	**199 244 182**	1	3.499
75	2 ½	65	10	1500	**199 244 163**	1	3.656	**199 244 183**	1	3.656
90	3	80	10	2400	**199 244 164**	1	4.692	**199 244 184**	1	4.692
110	4	100	10	3800	**199 244 165**	1	6.406	**199 244 185**	1	6.406
140	5	125	10	8600	**199 244 166**	1	9.222	**199 244 186**	1	9.222
160	6	150	10	11400	**199 244 167**	1	12.902	**199 244 187**	1	12.902
225	8	200	10	19900	**199 244 168**	1	16.691	**199 244 188**	1	16.691
280	10	250	10	34000	**199 244 169**	1	33.880	**199 244 189**	1	33.880
315	12	300	5	50000	**199 244 170**	1	43.985	**199 244 190**	1	43.985

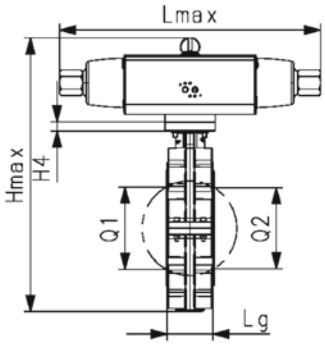

d (mm)	Size (inch)	Hmax (mm)	Lmax (mm)	Wmax (mm)	U (mm)	V (mm)	H4 (mm)	V1 (mm)	Lg (mm)	D2 (mm)	Q1 (mm)	Q2 (mm)	d2
63	2	328.1	274.4	165	90	133.3	23	78.8	44.7	160	40		UNC 5/8
75	2 ½	341.0	274.4	182	90	139.9	23	85.1	45.7	180	54	35	UNC 5/8
90	3	365.7	325.2	210	90	145.6	23	91.2	48.7	195	67	50	UNC 5/8
110	4	388.3	359.6	240	90	166.0	23	107.5	55.6	226	88	74	UNC 5/8
140	5	452.2	418.0	272	90	180.0	23	122.7	63.5	258	113	97	UNC 3/4
160	6	476.6	434.0	280	90	189.0	23	134.5	71.5	284	139	123	UNC 3/4
225	8	532.0	498.4	360	90	210.5	23	161.5	72.5	341	178	169	UNC 3/4
280	10	679.5	646.0	440	125	264.4	23	206.9	113.2	412	210	207	UNC 7/8
315	12	749.0	681.0	510	125	285.2	23	235.5	114.6	482	256	253	UNC 7/8

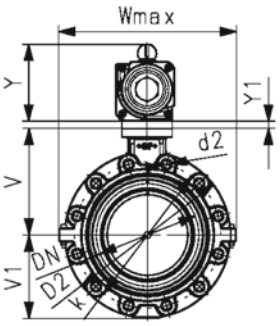

d (mm)	Size (inch)	k (mm)	Y (mm)	E (mm)	Y1 (mm)	M2 (mm)
63	2	120.7	98.2	70.4	15.0	137.2
75	2 ½	139.7	98.2	70.4	15.0	137.2
90	3	152.4	111.1	83.3	15.0	162.6
110	4	190.5	114.8	87.0		179.8
140	5	215.9	149.5	107.5		209.0
160	6	241.3	153.1	111.1		217.0
225	8	298.5	160.0	118.0		249.2
280	10	362.0	190.0	148.0	18.2	323.0
315	12	431.8	210.1	168.0	18.2	340.5

Lug-style end installation butterfly valve type 244 PVC-C
With pneumatic actuator - fail safe to open (FO)
Without manual override
Flange standard ANSI/ASME

Model:

- Housing material: PP-GF30 with SS316 lug-inserts
- Control range 90°<)
- Overall length according to EN 558, ISO 5752 (DN50 - 200 line 25, DN250 - 300 line 10)
- Connecting dimension ANSI/ASME B 16.5 Class 150

Option:

- Optional accessory: Valve-Integrated position feedback with limit switches (limit switches have to be ordered separately)

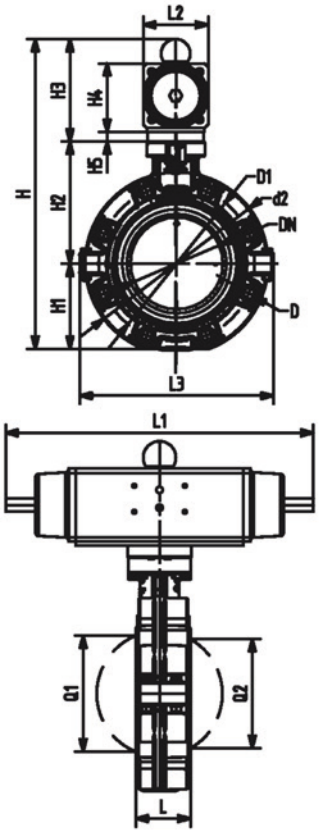

d (mm)	Size (inch)	DN (mm)	PN (bar)	kv-value (Δp=1 bar) (l/min)	EPDM Code	FKM Code
63	2	50	10	740	**199 244 202**	**199 244 222**
75	2 ½	65	10	1500	**199 244 203**	**199 244 223**
90	3	80	10	2400	**199 244 204**	**199 244 224**
110	4	100	10	3800	**199 244 205**	**199 244 225**
140	5	125	10	8600	**199 244 206**	**199 244 226**
160	6	150	10	11400	**199 244 207**	**199 244 227**
225	8	200	10	19900	**199 244 208**	**199 244 228**
280	10	250	10	34000	**199 244 209**	**199 244 229**
315	12	300	5	50000	**199 244 210**	**199 244 230**

Type of actuator	d2 (mm)	D	D1 (mm)	H (mm)	H1 (mm)	H2 (mm)	H3 (mm)	H4 (mm)	H5 (mm)	L (mm)	L1 (mm)	L2 (mm)	L3 (mm)
PA-30 FO	160	UNC 5/8	120.6	328	77	134	117	70	15	45	276	65	150
PA-30 FO	180	UNC 5/8	139.7	340	83	140	117	70	15	46	276	65	160
PA-35 FO	195	UNC 5/8	152.4	361	89	146	126	78	15	49	326	72	175
PA-40 FO	226	UNC 5/8	190.5	402	106	167	129	86		56	370	80	244
PA-45 FO	258	UNC 3/4	215.9	441	121	181	139	96		64	411	90	272
PA-50 FO	284	UNC 3/4	241.3	471	133	189	149	106		72	423	100	297
PA-55 FO	341	UNC 3/4	298.4	530	159	210	161	118		73	452	112	360
PA-70 FO	412	UNC 7/8	362.0	660	205	264	191			113	648	137	440
PA-70 FO	482	UNC 7/8	431.8	715	234	285	196	157		113	663	145	510

Q1 (mm)	Q2 (mm)
40	
54	35
67	50
88	74
113	97
139	123
178	169
210	207
256	253

Lug-style butterfly valve type 244 PVC-C
DA (Double acting)
Without manual override
Flange standard ANSI/ASME

Model:

- Housing material: PP-GF30 with SS316 lug-inserts
- Control range 90°<)
- Overall length according to EN 558, ISO 5752 (DN50 - 200 line 25, DN250 - 300 line 10)
- Connecting dimension ANSI/ASME B 16.5 Class 150

Option:

- Optional accessory: Valve-Integrated position feedback with limit switches (limit switches have to be ordered separately)

Note:

For some material combination (e.g. DN300 valves with PE/PP pipes) special flange adapters are needed. Please check the "Perfect flange connection tool" on www.gfps.com

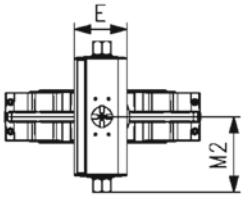

d (mm)	Size (inch)	DN (mm)	PN (bar)	kv-value (Δp=1 bar) (l/min)	EPDM Code	FKM Code
63	2	50	10	740	**199 244 242**	**199 244 262**
75	2 ½	65	10	1500	**199 244 243**	**199 244 263**
90	3	80	10	2400	**199 244 244**	**199 244 264**
110	4	100	10	3800	**199 244 245**	**199 244 265**
140	5	125	10	8600	**199 244 246**	**199 244 266**
160	6	150	10	11400	**199 244 247**	**199 244 267**
225	8	200	10	19900	**199 244 248**	**199 244 268**
280	10	250	10	34000	**199 244 249**	**199 244 269**
315	12	300	5	50000	**199 244 250**	**199 244 270**

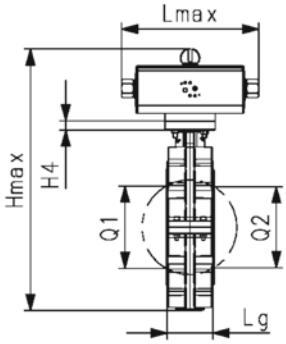

d (mm)	Size (inch)	Hmax (mm)	Lmax (mm)	Wmax (mm)	U (mm)	V (mm)	H4 (mm)	V1 (mm)	Lg (mm)	D2 (mm)	Q1 (mm)	Q2 (mm)	d2
63	2	319.4	196.2	165	90	133.9	23	78.8	44.7	160	40		UNC 5/8
75	2 ½	332.3	196.2	182	90	139.9	23	85.1	45.7	180	54	35	UNC 5/8
90	3	352.8	205.6	210	90	145.6	23	91.2	48.7	195	67	50	UNC 5/8
110	4	384.7	242.0	240	90	166.0	23	107.5	55.6	226	88	74	UNC 5/8
140	5	413.9	272.0	272	90	180.0	23	122.7	63.5	258	113	97	UNC 3/4
160	6	473.0	280.0	280	90	189.0	23	134.5	71.5	284	139	123	UNC 3/4
225	8	521.5	360.0	360	90	210.5	23	161.5	72.5	341	178	169	UNC 3/4
280	10	649.5	339.6	440	125	264.4	23	206.9	113.2	412	210	207	UNC 7/8
315	12	698.9	339.6	510	125	285.2	23	235.5	114.6	482	256	253	UNC 7/8

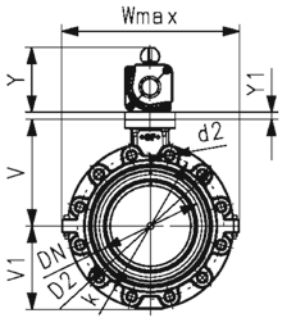

d (mm)	Size (inch)	k (mm)	Y (mm)	E (mm)	Y1 (mm)	M2 (mm)
63	2	120.7	92.3	64.5		98.1
75	2 ½	139.7	92.3	64.5		98.1
90	3	152.4	98.2	70.4	15	102.8
110	4	190.5	111.2	83.3		121.0
140	5	215.9	111.2	83.3		121.0
160	6	241.3	149.5	107.5		145.0
225	8	298.5	160.0	118.0		249.2
280	10	362.0	160.0	118.0		169.8
315	12	431.8	160.0	118.0		169.8

Lug-style end installation butterfly valve Type 244 PVC-C
FC (Fail safe to close)
Flange standard ANSI/ASME

Model:

- Overall length according to EN 558, ISO 5752
- Connecting dimension: ANSI/ASME B 16.5 Class 150
- Control pressure supply through integrated NAMUR interface according VDI/VDE 3845 with 4.2 bar (60.9 psi)
- Control time 90°<) 1-2s
- For easy installation and removal
- Full plastic solution (actuator housing made of PP-GF)
- Visual position indicator

Option:

- Optional accessory: Valve-Integrated position feedback with limit switches (limit switches have to be ordered separately)
- Positioner RPC, RPC D, RPC PID
- Individual configuration of the valve

Note:

For some material combination (e.g. DN300 valves with PE/PP pipes) special flange adapters are needed. Please check the "Perfect flange connection tool" on www.gfps.com

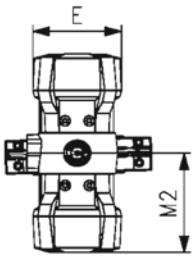

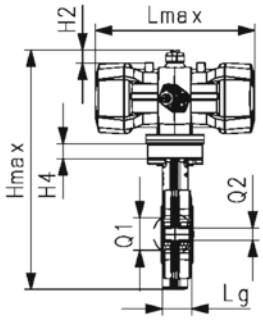

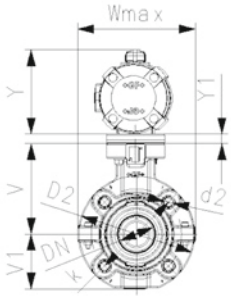

d (mm)	Size (inch)	DN (mm)	PN (bar)	EPDM Code	SP	Weight (kg)	FKM Code	SP	Weight (kg)
63	2	50	10	**199 244 702**	1	3.499	**199 244 722**	1	3.499
75	2 ½	65	10	**199 244 703**	1	3.656	**199 244 723**	1	3.656
90	3	80	10	**199 244 704**	1	4.692	**199 244 724**	1	4.692
110	4	100	10	**199 244 705**	1	6.406	**199 244 725**	1	6.406
140	5	125	10	**199 244 706**	1	9.222	**199 244 726**	1	9.222

d (mm)	Hmax (mm)	Lmax (mm)	Wmax (mm)	U (mm)	V (mm)	H4 (mm)	V1 (mm)	Lg (mm)	D2 (mm)	Q1 (mm)	Q2 (mm)	d2	k (mm)
63	338.1	245.5	165	90	133.3	23	78.8	44.7	160	40		UNC 5/8	120.7
75	351.0	245.5	182	90	139.9	23	85.1	45.7	180	54	35	UNC 5/8	139.7
90	367.8	343.0	210	90	145.6	23	91.2	48.7	195	67	50	UNC 5/8	152.4
110	404.5	343.0	240	90	166.0	23	107.5	55.6	226	88	74	UNC 5/8	190.5
140	433.7	343.0	272	90	180.0	23	122.7	63.5	258	113	97	UNC 3/4	215.9

d (mm)	Y (mm)	E (mm)	Y1 (mm)	M2 (mm)
63	111	119.5	15	122.75
75	111	119.5	15	122.75
90	131	141.5	15	171.50
110	131	141.5		171.50
140	131	141.5		171.50

Lug-style end installation butterfly valve type 244 PVC-C
FO (Fail safe to open)
Flange standard ANSI/ASME

Model:

- Overall length according to EN 558, ISO 5752
- Connecting dimension: ANSI/ASME B 16.5 Class 150
- Control pressure supply through integrated NAMUR interface according VDI/VDE 3845 with 4.2 bar (60.9 psi)
- Control time 90°<) 1-2s
- For easy installation and removal
- Full plastic solution (actuator housing made of PP-GF)
- Visual position indicator

Option:

- Optional accessory: Valve-Integrated position feedback with limit switches (limit switches have to be ordered separately)
- Positioner RPC, RPC D, RPC PID
- Individual configuration of the valve

Note:

For some material combination (e.g. DN300 valves with PE/PP pipes) special flange adapters are needed. Please check the "Perfect flange connection tool" on www.gfps.com

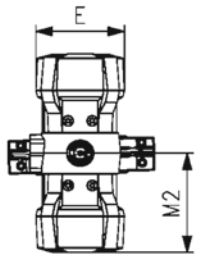

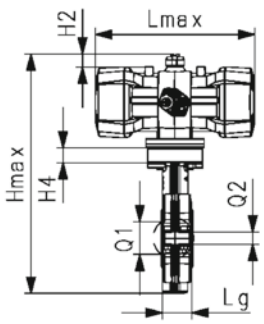

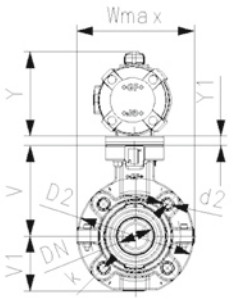

d (mm)	Size (inch)	DN (mm)	PN (bar)	EPDM Code	SP	Weight (kg)	FKM Code	SP	Weight (kg)
63	2	50	10	**199 244 732**	1	3.499	**199 244 742**	1	3.499
75	2 ½	65	10	**199 244 733**	1	3.656	**199 244 743**	1	3.656
90	3	80	10	**199 244 734**	1	4.692	**199 244 744**	1	4.692
110	4	100	10	**199 244 735**	1	6.406	**199 244 745**	1	6.406
140	5	125	10	**199 244 736**	1	9.222	**199 244 746**	1	9.222

d (mm)	Hmax (mm)	Lmax (mm)	Wmax (mm)	U (mm)	V (mm)	H4 (mm)	V1 (mm)	Lg (mm)	D2 (mm)	Q1 (mm)	Q2 (mm)	d2	k (mm)
63	338.1	245.5	165	90	133.3	23	78.8	44.7	160	40		UNC 5/8	120.7
75	351.0	245.5	182	90	139.9	23	85.1	45.7	180	54	35	UNC 5/8	139.7
90	367.8	343.0	210	90	145.6	23	91.2	48.7	195	67	50	UNC 5/8	152.4
110	404.5	343.0	240	90	166.0	23	107.5	55.6	226	88	74	UNC 5/8	190.5
140	433.7	343.0	272	90	180.0	23	122.7	63.5	258	113	97	UNC 3/4	215.9

d (mm)	Y (mm)	E (mm)	Y1 (mm)	M2 (mm)
63	111	119.5	15	122.75
75	111	119.5	15	122.75
90	131	141.5	15	171.50
110	131	141.5		171.50
140	131	141.5		171.50

Lug-style end installation butterfly valve type 244 PVC-C
DA (Double acting)
Flange standard ANSI/ASME

Model:

- Overall length according to EN 558, ISO 5752
- Connecting dimension: ANSI/ASME B 16.5 Class 150
- Control pressure supply through integrated NAMUR interface according VDI/VDE 3845 with 4.2 bar (60.9 psi)
- Control time 90°<) 1-2s
- For easy installation and removal
- Full plastic solution (actuator housing made of PP-GF)
- Visual position indicator

Option:

- Optional accessory: Valve-Integrated position feedback with limit switches (limit switches have to be ordered separately)
- Positioner RPC, RPC D, RPC PID
- Individual configuration of the valve

Note:

For some material combination (e.g. DN300 valves with PE/PP pipes) special flange adapters are needed. Please check the "Perfect flange connection tool" on www.gfps.com

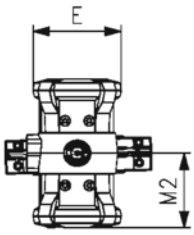

d (mm)	Size (inch)	DN (mm)	PN (bar)	EPDM Code	SP	Weight (kg)	FKM Code	SP	Weight (kg)
63	2	50	10	**199 244 752**	1	3.500	**199 244 762**	1	3.499
75	2 ½	65	10	**199 244 753**	1	3.600	**199 244 763**	1	3.656
90	3	80	10	**199 244 754**	1	4.700	**199 244 764**	1	4.692
110	4	100	10	**199 244 755**	1	6.406	**199 244 765**	1	6.406
140	5	125	10	**199 244 756**	1	9.200	**199 244 766**	1	9.222

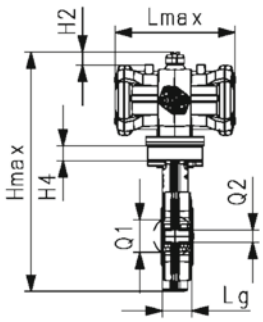

d (mm)	Hmax (mm)	Lmax (mm)	Wmax (mm)	U (mm)	V (mm)	H4 (mm)	V1 (mm)	Lg (mm)	D2 (mm)	Q1 (mm)	Q2 (mm)	d2	k (mm)
63	338.1	183.5	165	90	133.3	23	78.8	44.7	160	40		UNC 5/8	120.7
75	351.0	183.5	182	90	139.9	23	85.1	45.7	180	54	35	UNC 5/8	139.7
90	362.8	183.5	210	90	145.6	23	91.2	48.7	195	67	50	UNC 5/8	152.4
110	404.5	261.0	240	90	166.0	23	107.5	55.6	226	88	74	UNC 5/8	190.5
140	433.7	261.0	272	90	180.0	23	122.7	63.5	258	113	97	UNC 3/4	215.9

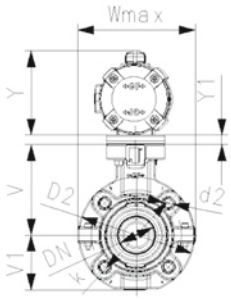

d (mm)	Y (mm)	E (mm)	Y1 (mm)	M2 (mm)
63	111	119.5	15	91.75
75	111	119.5	15	91.75
90	111	119.5	15	91.75
110	131	141.5		130.50
140	131	141.5		130.50

Butterfly valves electric type 147

Lug-style end installation butterfly valve type 147 PVC-C
With electric actuator 230 V
Without manual override
Flange standard ANSI/ASME

Model:

- Voltage 100-230V, 50-60Hz
- Factory set control range 90°<)
- Heating element, position feedback (Open/Close/ Middle)
- Overall length according to EN 558, ISO 5752 (DN50-200 line 25, DN250-300 line 16)
- Connecting dimension ANSI/ASME B 16.5 Class 150

Option:

- Other valve and actuator configurations available
- Optional accessories: Fail-safe return unit, Monitoring board, Position controller, Profibus DP board

Note:

For some material combination (e.g. DN300 valves with PE/PP pipes) special flange adapters are needed. Please check the "Perfect flange connection tool" on www.gfps.com

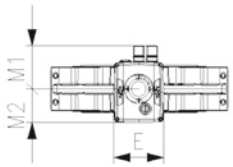

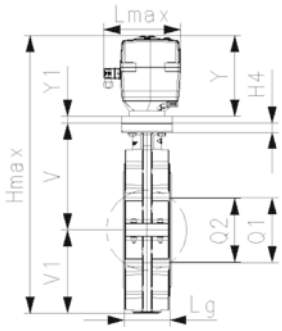

d (mm)	Size (inch)	DN (mm)	PN (bar)	kv-value (Δp=1 bar) (l/min)	EPDM Code	Weight (kg)	PTFE Code
63	2	50	10	740	**199 147 202**	4.299	**199 147 722**
75	2 ½	65	10	1500	**199 147 203**	4.456	**199 147 723**
90	3	80	10	2400	**199 147 204**	4.701	**199 147 724**
110	4	100	10	3800	**199 147 205**	5.606	**199 147 725**
140	5	125	10	8600	**199 147 206**	7.120	**199 147 726**
160	6	150	10	11400	**199 147 207**	8.881	**199 147 727**
225	8	200	10	19900	**199 147 208**	13.625	**199 147 728**
280	10	250	6	34000	**199 147 209**	24.385	
315	12	300	4	50000	**199 147 210**	30.916	

Hmax (mm)	Lmax (mm)	Wmax (mm)	U (mm)	V (mm)	H4 (mm)	V1 (mm)	Lg (mm)	D2 (mm)	Q1 (mm)	Q2 (mm)	d2	Y (mm)	E (mm)
378.3	190	165	90	133.3	23	78.8	44.7	160	40		UNC 5/8	166.2	122.3
391.2	190	182	90	139.9	23	85.1	45.7	180	54	35	UNC 5/8	166.2	122.3
426.1	190	210	90	145.6	23	91.2	48.7	195	67	50	UNC 5/8	189.3	122.3
462.8	190	240	90	166.0	23	107.5	55.6	226	88	74	UNC 5/8	189.3	122.3
492.0	190	272	90	180.0	23	122.7	63.5	258	113	97	UNC 3/4	189.3	122.3
522.8	190	300	90	189.0	23	134.5	71.5	284	139	123	UNC 3/4	199.3	122.3
571.3	190	360	90	210.5	23	161.5	72.5	341	178	169	UNC 3/4	199.3	122.3
670.6	190	440	125	264.4	23	206.9	113.2	412	210	207	UNC 7/8	199.3	122.3
720.0	190	510	125	285.2	23	235.5	114.6	482	256	253	UNC 7/8	199.3	122.3

Y1 (mm)	M1 (mm)	M2 (mm)
	107.3	82.7
	107.3	82.7
	107.3	82.7
	107.3	82.7
	107.3	82.7
	107.3	82.7
	107.3	82.7
17	107.3	82.7
17	107.3	82.7

Lug-style, end installation butterfly valve type 147 PVC-C
With electric actuator 24V
Without manual override
Flange standard ANSI/ASME

Model:

- Voltage 24V AC/DC
- Factory set control range 90°<)
- Heating element, position feedback (Open/Close/ Middle)
- Overall length according to EN 558, ISO 5752 (DN50-200 line 25, DN250-300 line 16)
- Connecting dimension ANSI/ASME B 16.5 Class 150

Option:

- Other valve and actuator configurations available
- Optional accessories: Fail-safe return unit, Monitoring board, Position controller, Profibus DP board

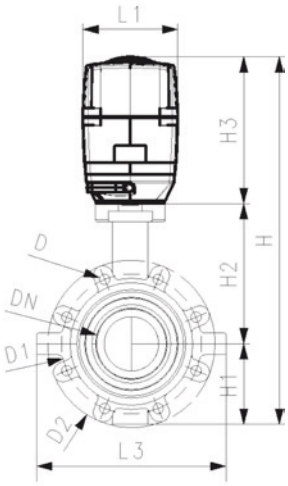

d (mm)	Size (inch)	DN (mm)	PN (bar)	kv-value (Δp=1 bar) (l/min)	EPDM Code	Weight (kg)	PTFE Code
63	2	50	10	740	**199 147 282**	4.299	**199 147 742**
75	2 ½	65	10	1500	**199 147 283**	4.456	**199 147 743**
90	3	80	10	2400	**199 147 284**	4.701	**199 147 744**
110	4	100	10	3800	**199 147 285**	5.606	**199 147 745**
140	5	125	10	8600	**199 147 286**	5.606	**199 147 746**
160	6	150	10	11400	**199 147 287**	8.881	**199 147 747**
225	8	200	10	19900	**199 147 288**	13.625	**199 147 748**
280	10	250	4	34000	**199 147 289**	24.385	
315	12	300	6	50000	**199 147 290**	30.916	

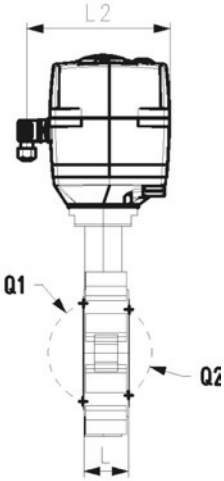

Type of actuator	d2 (mm)	D	D1 (mm)	H (mm)	H1 (mm)	H2 (mm)	H3 (mm)	L (mm)	L1 (mm)	L2 (mm)	L3 (mm)	Q1 (mm)	Q2 (mm)
EA-45	160	UNC 5/8	120.6	399	77	134	188	45	122	180	165	40	
EA-45	180	UNC 5/8	139.7	411	83	140	188	46	122	180	182	54	35
EA-120	195	UNC 5/8	152.4	423	89	146	188	49	122	180	210	67	50
EA-120	226	UNC 5/8	190.5	461	106	167	188	56	122	180	240	88	74
EA-120	258	UNC 3/4	215.9	490	121	181	188	64	122	180	272	113	97
EA-120	284	UNC 3/4	241.3	510	133	189	188	72	122	180	300	139	123
EA-250	341	UNC 3/4	298.4	577	159	210	208	73	122	180	360	178	169
EA-250	482	UNC 7/8	431.8	727	234	285	208	113	122	180	510	256	253
EA-250	412	UNC 7/8	362.0	677	205	264	208	113	122	180	440	210	207

Diaphragm valves type 317

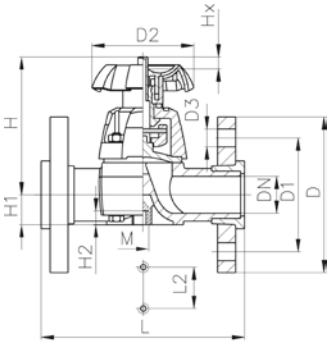

DN 15–65

Diaphragm valve type 317 PVC-C
With backing flange PP-V Inch ANSI

Model:

- Flat sealing faces
- DN65 with backing flange
- Overall length according to EN 558
- Connecting dimension ANSI/ASME B 16.5 / ASTM D 4024

Option:

- Handwheel with built-in locking mechanism (standard version is nonlockable)

*** DN80, DN100 and DN150 fixed flanges metric and inch ANSI B16.5**

	d (mm)	DN (mm)	Size (inch)	PN (bar)	kv-value (Δp=1 bar) (l/min)	EPDM Code	Weight (kg)
	75	65	2 ½	10	992	**163 317 623**	5.335
*	90	80	3	10	1700	**163 317 024**	9.722
*	110	100	4	6	2700	**163 317 025**	13.600

	FKM Code	PTFEwith EPDM supp. diaphragm Code	Weight (kg)
	163 317 668	**163 317 638**	4.425
*	**163 317 069**		
*	**163 317 370**	**163 317 040**	13.799

	D (mm)	D1 (mm)	D2 (mm)	D3 (mm)	H (mm)	H1 (mm)	H2 (mm)	L (mm)	L1 (mm)	L2 (mm)	M	Lift = Hx (mm)	AL
	185		152		201	46		290		70	M8		4
*	200	160	270	18	265	57	23	310	35	120	M12	40	8
*	225	180	270	18	304	69	23	350	35	120	M12	50	8

Diaphragm valves type 514

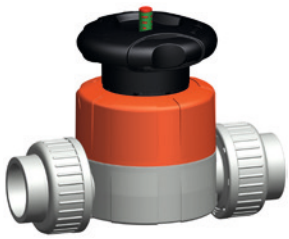

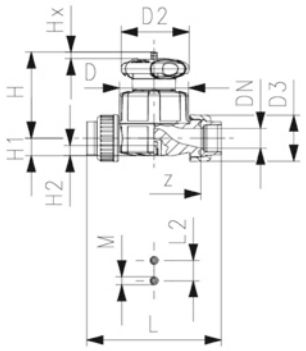

Diaphragm valve type 514 PVC-C
With solvent cement sockets ASTM

Model:

- Double flow rate compared to predecessor
- One housing nut replaces four screws
- Handwheel with built-in locking mechanism
- For easy installation and removal
- Short overall length

Option:

- Individual configuration of the valve
- Self adjusting multifunctional module with integrated limit switches

* O-Ring material: FKM

d (mm)	DN (mm)	Size (inch)	PN (bar)	kv-value (Δp=1 bar) (l/min)	EPDM Code	SP	Weight (kg)
20	15	½	10	125	**163 514 612**	1	0.310
25	20	¾	10	271	**163 514 613**	1	0.445
32	25	1	10	481	**163 514 614**	1	0.708
40	32	1 ¼	10	759	**163 514 615**	1	0.998
50	40	1 ½	10	1263	**163 514 616**	1	1.692
63	50	2	10	1728	**163 514 617**	1	2.583

FKM Code	PTFE/ EPDM* Code	SP	Weight (kg)
163 514 662	**163 514 632**	1	0.310
163 514 663	**163 514 633**	1	0.522
163 514 664	**163 514 634**	1	0.727
163 514 665	**163 514 635**	1	1.412
163 514 666	**163 514 636**	1	1.726
163 514 667	**163 514 637**	1	3.382

D (mm)	D2 (mm)	D3 (mm)	H (mm)	H1 (mm)	H2 (mm)	L (mm)	L2 (mm)	M	z (mm)	Lift = Hx (mm)
65	65	43	73	14	12	141	25	M6	96	7
80	65	51	81	18	12	165	25	M6	114	10
88	87	58	107	22	12	179	25	M6	122	13
101	87	72	115	26	15	204	45	M8	140	15
117	135	83	148	32	15	230	45	M8	160	19
144	135	100	166	39	15	268	45	M8	190	25

Diaphragm valves type 517

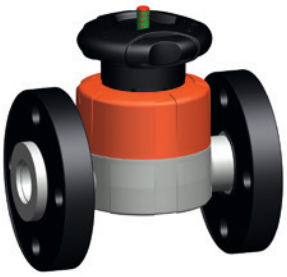

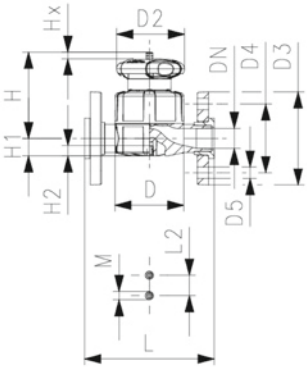

Diaphragm valve type 517 PVC-C
With backing flanges PP-V Inch ANSI

Model:

- Double flow rate compared to predecessor
- One housing nut replaces four screws
- Handwheel with built-in locking mechanism
- Flat sealing faces
- Overall length EN 558
- Connecting dimension: ANSI/ASME B 16.5 class 150, ASTM D 4024, BS 1560, BS EN 1759

Option:

- Individual configuration of the valve
- Self adjusting multifunctional module with integrated limit switches

* O-Ring material: FKM

d (mm)	DN (mm)	Size (inch)	PN (bar)	kv-value (Δp=1 bar) (l/min)	EPDM Code	SP	Weight (kg)
20	15	½	10	125	**163 517 712**	1	0.529
25	20	¾	10	271	**163 517 713**	1	0.696
32	25	1	10	481	**163 517 714**	1	1.388
40	32	1 ¼	10	759	**163 517 715**	1	1.797
50	40	1 ½	10	1263	**163 517 716**	1	2.854
63	50	2	10	1728	**163 517 717**	1	4.022

FKM Code	PTFE/ EPDM* Code	SP	Weight (kg)
163 517 762	**163 517 732**	1	0.456
163 517 763	**163 517 733**	1	0.696
163 517 764	**163 517 734**	1	0.951
163 517 765	**163 517 735**	1	1.818
163 517 766	**163 517 736**	1	2.883
163 517 767	**163 517 737**	1	4.050

D (mm)	D2 (mm)	D3 (mm)	D4 (mm)	D5 (mm)	H (mm)	H1 (mm)	H2 (mm)	L (mm)	L2 (mm)	M	Lift = Hx (mm)
65	65	95	60	16	73	14	12	130	25	M6	7
80	65	105	70	16	81	18	12	150	25	M6	10
88	87	115	79	16	107	22	12	160	25	M6	13
101	87	140	89	16	115	26	15	180	45	M8	15
117	135	150	98	16	148	32	15	200	45	M8	19
144	135	165	121	19	166	39	15	230	45	M8	25

Copiable
Configurator GF Diaphragm Valve

Valve body type
A20 Type 514 - True Union Design
A21 Type 515 - Spigots
A22 Type 517 - Flanges

Material
B01 PVC-U
B02 PVC-C
B03 ABS

Dimension
C05 DN 10 3/8"
C06 DN 15 1/2"
C07 DN 20 3/4"
C08 DN 25 1"
C09 DN 32 1 1/4"
C10 DN 40 1 1/2"
C11 DN 50 2"

Version
D11 standard
D05 silicone free / oil free

Diaphragm
E01 EPDM
E02 FPM
E11 NBR
E12 PTFE/EPDM
E04 PTFE/FPM

Connecting parts

H01	PVC-U Cemented socket metric
H02	PVC-U Cemented socket JIS
H03	PVC-U Cemented socket ASTM
H04	PVC-U Cemented socket Zoll BS
H05	PVC-U Cemented spigot metric
H06	PVC-U Threaded socket Rp (ISO)
H08	PVC-U Threaded socket Rc (JIS)
H09	PVC-U Threaded socket NPT (ASTM)
H11	PVC-C Cemented socket metric
H13	PVC-C Cemented socket Zoll ASTM
H14	PVC-C Cemented spigot metric
H20	ABS Cemented socket metric
H21	ABS Cemented socket Zoll BS
H24	ABS Cemented spigot metric
H40	PE-80 Fusion socket metric
H41	PE-100 Butt fusion spigot SDR11 metric
H43	PE-100 Butt fusion spigto long SDR11 metric
H62	Fixed flange PVC-U JIS
H70	Backing flange PVC-U metric with PVC-U endings
H71	Backing flange PVC-U Zoll ANSI with PVC-U endings
H71 PVCC	Backing flange PVC-U Zoll ANSI with PVC-C endings
H72 PVCU	Backing flange PP-steel metric with PVC-U endings
H72 PVCC	Backing flange PP-steel metric with PVC-C endings
H72 ABS	Backing flange PP-steel metric with ABS endings
H73 PVCU	Backing flange PP-steel Zoll ANSI with PVC-U endings
H73 PVCC	Backing flange PP-steel Zoll ANSI with PVC-C endings
H73 ABS	Backing flange PP-steel Zoll ANSI with ABS endings
H74 PVCU	Backing flange PP-V metric with PVC-U endings
H74 PVCC	Backing flange PP-V metric with PVC-C endings
H74 ABS	Backing flange PP-V metric with ABS endings
H74 PVCC	Backing flange PP-V metric with PVC-C endings
H75 PVCU	Backing flange PP-V ANSI with PVC-U endings
H75 PVCC	Backing flange PP-V ANSI with PVC-C endings
H78 PVCU	Backing flange PP-GF JIS with PVC-U endings
H80	PVC-U valve end blank

Electrical feedback
I33 Electrical feedback with Ag, Ni limit switches
I34 Electrical feedback with Au limit switches

Manual actuated: pressure tight housing
K30 Bonnet pressure tight
K31 Bonnet not pressure tight

Pressure range
M01 PN10
M02 PN16

Pneumatic Actuator DIASTAR
P40 DIASTAR Six FC fail safe to close
P43 DIASTAR Ten FC fail safe to close
P44 DIASTAR Sixteen FC fail safe to close
P45 DIASTAR Sixteen FO fail safe to open
P46 DIASTAR Sixteen DA double acting
P47 DIASTAR Ten FO fail safe to open
P48 DIASTAR Ten DA double acting

Example:
Diaphragm valve with valve body type 515, PVC-U, EPDM diaphragm, DN25, cemented spigots metric, electrical feedback, pressure tight housing, PN10

A21 B01 C08 D11 E01 H05 I33 K30 M01

P =

+GF+

Diaphragm valves pneumatic DIASTAR Six

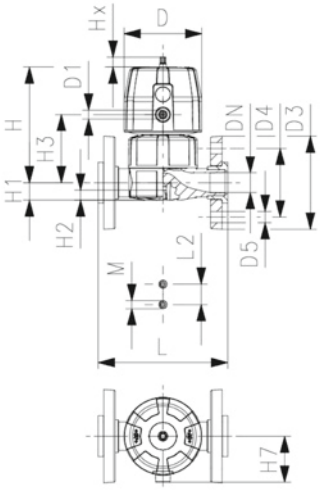

Diaphragm valve DIASTAR Six PVC-C
FC (Fail safe to close)
With backing flanges PP-V Inch ANSI

Model:

- Double flow rate compared to predecessor
- One housing nut replaces four screws
- Rotating air connection at 90° intervals
- Flat sealing faces
- Overall length EN 558
- Connecting dimension: ANSI/ASME B 16.5 class 150, ASTM D 4024, BS 1560, BS EN 1759

Option:

- Individual configuration of the valve

Size (inch)	DN (mm)	PN (bar)	kv-value (Δp=1 bar) (l/min)	EPDM Code	SP	Weight (kg)
¾	20	6	271	**163 617 713**	1	1.215
1	25	6	481	**163 617 714**	1	1.502
1 ¼	32	6	759	**163 617 715**	1	2.436
1 ½	40	6	960	**163 617 716**	1	3.004
2	50	6	1181	**163 617 717**	1	4.399

Size (inch)	D (mm)	D1_G (inch)	D3 (mm)	D4 (mm)	D5 (mm)	H (mm)	H1 (mm)	H2 (mm)	H3 (mm)	H7 (mm)	L (mm)	L2 (mm)	M	Lift = Hx (mm)
¾	96	⅛	105	70	16	132	18	12	73	57	150	25	M6	10
1	96	⅛	115	79	16	143	22	12	84	57	160	25	M6	13
1 ¼	120	⅛	140	89	16	173	26	15	99	69	180	45	M8	14
1 ½	120	⅛	150	98	16	193	32	15	119	69	200	45	M8	16
2	120	⅛	165	121	19	205	39	15	132	69	230	45	M8	16

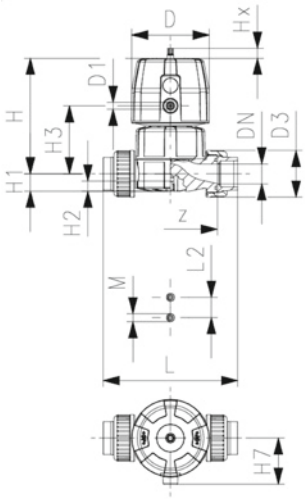

Diaphragm valve DIASTAR Six PVC-C
FC (Fail safe to close)
Unions with solvent cement sockets ASTM

Model:

- Double flow rate compared to predecessor
- One housing nut replaces four screws
- Rotating air connection at 90° intervals
- For easy installation and removal
- Short overall length

Option:

- Individual configuration of the valve

d (mm)	DN (mm)	Size (inch)	PN (bar)	kv-value (Δp=1 bar) (l/min)	EPDM Code	SP	Weight (kg)
25	20	¾	6	271	**163 614 613**	1	1.065
32	25	1	6	481	**163 614 614**	1	1.304
40	32	1 ¼	6	759	**163 614 615**	1	2.111
50	40	1 ½	6	960	**163 614 616**	1	2.780
63	50	2	6	1181	**163 614 617**	1	3.924

table continued on the next page

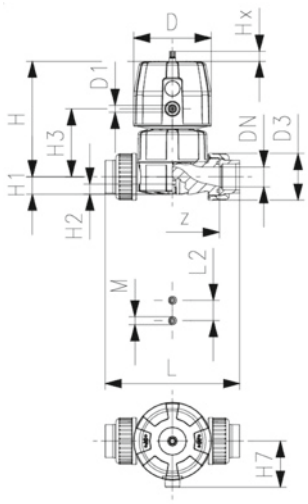

D (mm)	D1_G (inch)	H (mm)	H1 (mm)	H2 (mm)	H3 (mm)	H7 (mm)	L (mm)	L2 (mm)	M	z (mm)	Lift = Hx (mm)
96	⅛	132	18	12	73	57	165	25	M6	114	10
96	⅛	143	22	12	84	57	179	25	M6	122	13
120	⅛	173	26	15	99	69	204	45	M8	140	14
120	⅛	193	32	15	119	69	230	45	M8	160	16
120	⅛	205	39	15	132	69	268	45	M8	190	16

Diaphragm valves pneumatic DIASTAR Ten

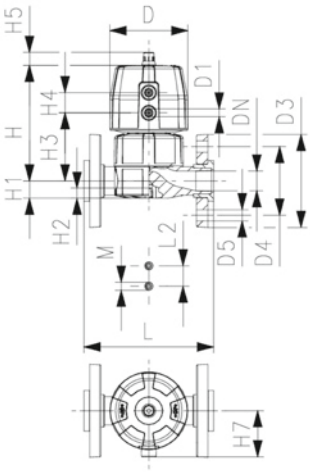

Diaphragm valve DIASTAR Ten PVC-C
DA (Double acting)
With backing flanges PP-V Inch ANSI

Model:

- Double flow rate compared to predecessor
- One housing nut replaces four screws
- Rotating air connection at 90° intervals
- Flat sealing faces
- Overall length EN 558
- Connecting dimension: ANSI/ASME B 16.5 class 150, ASTM D 4024, BS 1560, BS EN 1759

Option:

- Individual configuration of the valve
- Comprehensive range of accessories available

* PN: PTFE
Working Pressure: **one side**
* O-Ring material: FKM

d (mm)	DN (mm)	Size (inch)	PN (bar)	PN* (bar)	kv-value (Δp=1 bar) (l/min)	EPDM Code	SP	Weight (kg)
20	15	½	10	10*	125	**163 657 712**	1	0.657
25	20	¾	10	10*	271	**163 657 713**	1	1.080
32	25	1	10	10*	481	**163 657 714**	1	1.364
40	32	1 ¼	10	10*	759	**163 657 715**	1	2.166
50	40	1 ½	10	10*	1263	**163 657 716**	1	3.302
63	50	2	10	10*	1728	**163 657 717**	1	4.480

FKM Code	PTFE/ EPDM* Code	SP	Weight (kg)
163 657 762	**163 657 732**	1	0.657
163 657 763	**163 657 733**	1	1.080
163 657 764	**163 657 734**	1	1.385
163 657 765	**163 657 735**	1	2.187
163 657 766	**163 657 736**	1	3.331
163 657 767	**163 657 737**	1	4.508

D (mm)	D1_G (inch)	D3 (mm)	D4 (mm)	D5 (mm)	H (mm)	H1 (mm)	H2 (mm)	H3 (mm)	H4 (mm)	H5 (mm)	H7 (mm)	L (mm)	L2 (mm)	M
68	⅛	95	60	16	101	14	12	60	24	16	43	130	25	M6
96	⅛	105	70	16	132	18	12	73	25	16	57	150	25	M6
96	⅛	115	79	16	143	22	12	84	25	16	57	160	25	M6
120	⅛	140	89	16	173	26	15	99	26	26	69	180	45	M8
150	¼	150	98	16	214	32	15	119	36	26	88	200	45	M8
150	¼	165	121	19	226	39	15	132	36	26	88	230	45	M8

Lift = Hx (mm)
7
10
13
15
19
23

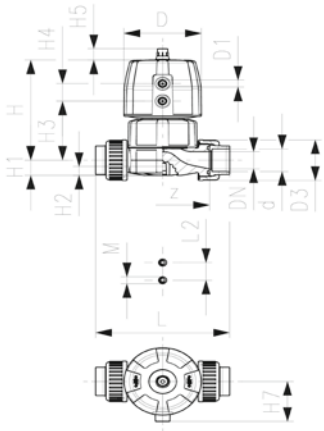

Diaphragm valve DIASTAR Ten PVC-C
DA (Double acting)
Unions with solvent cement sockets ASTM

Model:

- Double flow rate compared to predecessor
- One housing nut replaces four screws
- Rotating air connection at 90° intervals
- For easy installation and removal
- Short overall length

Option:

- Individual configuration of the valve
- Comprehensive range of accessories available

* PN: PTFE
Working Pressure: **one side**
* O-Ring material: FKM

d (mm)	DN (mm)	Size (inch)	PN (bar)	PN* (bar)	kv-value (Δp=1 bar) (l/min)	EPDM Code	SP	Weight (kg)
20	15	½	10	10*	125	**163 654 612**	1	0.538
25	20	¾	10	10*	271	**163 654 613**	1	0.930
32	25	1	10	10*	481	**163 654 614**	1	1.166
40	32	1 ¼	10	10*	759	**163 654 615**	1	1.841
50	40	1 ½	10	10*	1263	**163 654 616**	1	3.078
63	50	2	10	10*	1728	**163 654 617**	1	4.005

FKM Code	PTFE/ EPDM* Code	SP	Weight (kg)
163 654 662	**163 654 632**	1	0.526
163 654 663	**163 654 633**	1	0.907
163 654 664	**163 654 634**	1	1.137
163 654 665	**163 654 635**	1	1.781
163 654 666	**163 654 636**	1	2.992
163 654 667	**163 654 637**	1	3.840

D (mm)	D1_G (inch)	H (mm)	H1 (mm)	H2 (mm)	H3 (mm)	H4 (mm)	H5 (mm)	H7 (mm)	L (mm)	L2 (mm)	M	z (mm)	Lift = Hx (mm)
68	⅛	101	14	12	60	24	16	43	141	25	M6	96	7
96	⅛	132	18	12	73	25	16	57	165	25	M6	114	10
96	⅛	143	22	12	84	25	16	57	179	25	M6	122	13
120	⅛	173	26	15	99	26	26	69	204	45	M8	140	15
150	¼	214	32	15	119	36	26	88	230	45	M8	160	19
150	¼	226	39	15	132	36	26	88	268	45	M8	190	23

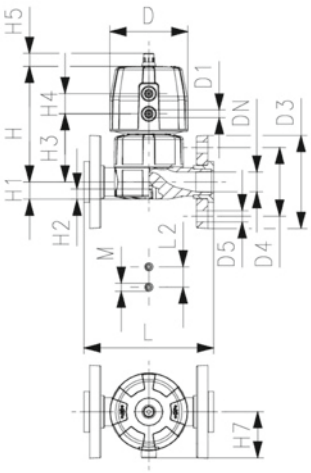

Diaphragm valve DIASTAR Ten PVC-C
FO (Fail safe to open)
With backing flanges PP-V Inch ANSI

Model:

- Double flow rate compared to predecessor
- One housing nut replaces four screws
- Rotating air connection at 90° intervals
- Flat sealing faces
- Overall length EN 558
- Connecting dimension: ANSI/ASME B 16.5 class 150, ASTM D 4024, BS 1560, BS EN 1759

Option:

- Individual configuration of the valve
- Comprehensive range of accessories available

* PN: PTFE
Working Pressure: **one side**
* O-Ring material: FKM

d (mm)	DN (mm)	Size (inch)	PN (bar)	PN* (bar)	kv-value (Δp=1 bar) (l/min)	EPDM Code	SP	Weight (kg)
20	15	½	10	10/10*	125	**163 647 712**	1	0.673
25	20	¾	10	10/10*	271	**163 647 713**	1	1.116
32	25	1	10	10/10*	481	**163 647 714**	1	1.394
40	32	1 ¼	10	10/10*	759	**163 647 715**	1	2.226
50	40	1 ½	10	10/10*	1263	**163 647 716**	1	4.052
63	50	2	10	10/10*	1728	**163 647 717**	1	5.230

FKM Code	PTFE/ EPDM* Code	SP	Weight (kg)
163 647 662	**163 647 732**	1	0.673
163 647 663	**163 647 733**	1	1.116
163 647 664	**163 647 734**	1	1.415
163 647 665	**163 647 735**	1	2.247
163 647 666	**163 647 736**	1	4.081
167 647 667	**163 647 737**	1	5.258

D (mm)	D1_G (inch)	D3 (mm)	D4 (mm)	D5 (mm)	H (mm)	H1 (mm)	H2 (mm)	H3 (mm)	H4 (mm)	H5 (mm)	H7 (mm)	L (mm)	L2 (mm)	M
68	⅛	95	60	16	101	14	12	60	24	16	43	130	25	M6
96	⅛	105	70	16	132	18	12	73	25	16	57	150	25	M6
96	⅛	115	79	16	143	22	12	84	25	16	57	160	25	M6
120	⅛	140	89	16	173	26	15	99	26	26	69	180	45	M8
150	¼	150	98	16	214	32	15	119	36	26	88	200	45	M8
150	¼	165	121	19	226	39	15	132	36	26	88	230	45	M8

Lift = Hx (mm)
7
10
13
15
19
23

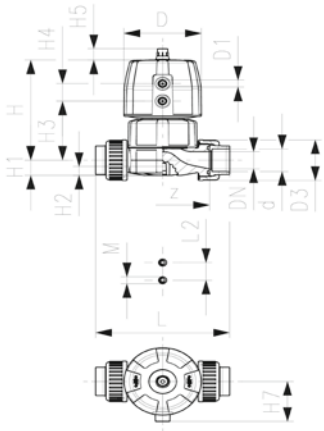

Diaphragm valve DIASTAR Ten PVC-C
FO (Fail safe to open)
Unions with solvent cement sockets ASTM

Model:

- Double flow rate compared to predecessor
- One housing nut replaces four screws
- Rotating air connection at 90° intervals
- For easy installation and removal
- Short overall length

Option:

- Individual configuration of the valve
- Comprehensive range of accessories available

* PN: PTFE
Working Pressure: **one side**
* O-Ring material: FKM

d (mm)	DN (mm)	Size (inch)	PN (bar)	PN* (bar)	kv-value (Δp=1 bar) (l/min)	EPDM Code	SP	Weight (kg)
20	15	½	10	5*	125	**163 644 612**	1	0.554
25	20	¾	10	6*	271	**163 644 613**	1	0.966
32	25	1	10	6*	481	**163 644 614**	1	1.196
40	32	1 ¼	10	6*	759	**163 644 615**	1	1.901
50	40	1 ½	10	6*	1263	**163 644 616**	1	3.828
63	50	2	10	6*	1728	**163 644 617**	1	4.755

FKM Code	PTFE/ EPDM* Code	SP	Weight (kg)
163 644 662	**163 644 632**	1	0.542
163 644 663	**163 644 633**	1	0.943
163 644 664	**163 644 634**	1	1.167
163 644 665	**163 644 635**	1	1.841
163 644 666	**163 644 636**	1	3.742
163 644 667	**163 644 637**	1	4.590

D (mm)	D1_G (inch)	H (mm)	H1 (mm)	H2 (mm)	H3 (mm)	H4 (mm)	H5 (mm)	H7 (mm)	L (mm)	L2 (mm)	M	z (mm)	Lift = Hx (mm)
68	⅛	101	14	12	60	24	16	43	141	25	M6	96	7
96	⅛	132	18	12	73	25	16	57	165	25	M6	114	10
96	⅛	143	22	12	84	25	16	57	179	25	M6	122	13
120	⅛	173	26	15	99	26	26	69	204	45	M8	140	15
150	¼	214	32	15	119	36	26	88	230	45	M8	160	19
150	¼	226	39	15	132	36	26	88	268	45	M8	190	23

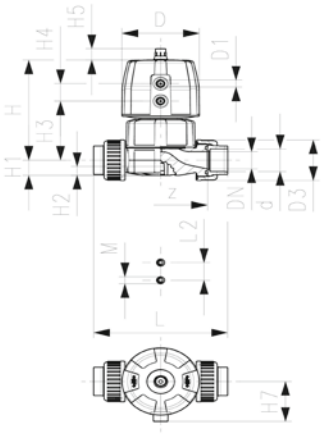

Diaphragm valve DIASTAR Ten PVC-C
FC (Fail safe to close)
Unions with solvent cement sockets ASTM

Model:

- Double flow rate compared to predecessor
- One housing nut replaces four screws
- Rotating air connection at 90° intervals
- For easy installation and removal
- Short overall length

Option:

- Individual configuration of the valve
- Comprehensive range of accessories available

* PN: PTFE
Working Pressure: **one side**
* O-Ring material: FKM

d (mm)	DN (mm)	Size (inch)	PN (bar)	PN* (bar)	kv-value (Δp=1 bar) (l/min)	EPDM Code	SP	Weight (kg)
20	15	½	10	10*	125	**163 624 612**	1	0.603
25	20	¾	10	10*	271	**163 624 613**	1	1.140
32	25	1	10	10*	481	**163 624 614**	1	1.376
40	32	1 ¼	10	10*	759	**163 624 615**	1	2.261
50	40	1 ½	10	10*	1263	**163 624 616**	1	3.918
63	50	2	10	6*	1728	**163 624 617**	1	4.845

FKM Code	PTFE/ EPDM* Code	SP	Weight (kg)
163 624 662	**163 624 632**	1	0.592
163 624 663	**163 624 633**	1	1.117
163 624 664	**163 624 634**	1	1.347
163 624 665	**163 624 635**	1	2.201
163 624 666	**163 624 636**	1	3.832
163 624 667	**163 624 637**	1	4.680

D (mm)	D1_G (inch)	H (mm)	H1 (mm)	H2 (mm)	H3 (mm)	H4 (mm)	H5 (mm)	H7 (mm)	L (mm)	L2 (mm)	M	z (mm)	Lift = Hx (mm)
68	⅛	101	14	12	60	24	16	43	141	25	M6	96	7
96	⅛	132	18	12	73	25	16	57	165	25	M6	114	10
96	⅛	143	22	12	84	25	16	57	179	25	M6	122	13
120	⅛	173	26	15	99	26	26	69	204	45	M8	140	15
150	¼	214	32	15	119	36	26	88	230	45	M8	160	19
150	¼	226	39	15	132	36	26	88	268	45	M8	190	23

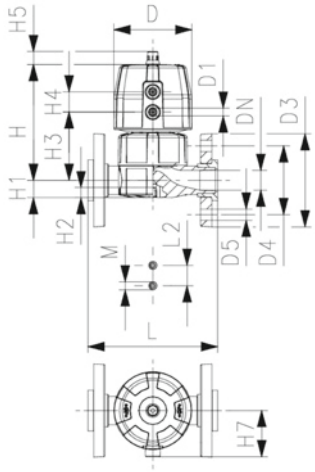

Diaphragm valve DIASTAR Ten PVC-C
FC (Fail safe to close)
With backing flanges PP-V Inch ANSI

Model:

- Double flow rate compared to predecessor
- One housing nut replaces four screws
- Rotating air connection at 90° intervals
- Flat sealing faces
- Overall length EN 558
- Connecting dimension: ANSI/ASME B 16.5 class 150, ASTM D 4024, BS 1560, BS EN 1759

Option:

- Individual configuration of the valve
- Comprehensive range of accessories available

* PN: PTFE
Working Pressure: **one side**
* O-Ring material: FKM

d (mm)	DN (mm)	Size (inch)	PN (bar)	PN* (bar)	kv-value (Δp=1 bar) (l/min)	EPDM Code	SP	Weight (kg)
20	15	½	10	10*	125	**163 627 712**	1	0.723
25	20	¾	10	10*	271	**163 627 713**	1	1.290
32	25	1	10	10*	481	**163 627 714**	1	1.574
40	32	1 ¼	10	10*	759	**163 627 715**	1	2.586
50	40	1 ½	10	10*	1263	**163 627 716**	1	4.142
63	50	2	10	6*	1728	**163 627 717**	1	5.320

FKM Code	PTFE/ EPDM* Code	SP	Weight (kg)
163 627 762	**163 627 732**	1	0.723
163 627 763	**163 627 733**	1	1.290
163 627 764	**163 627 734**	1	1.595
163 627 765	**163 627 735**	1	2.607
163 627 766	**163 627 736**	1	4.171
163 627 767	**163 627 737**	1	5.433

D (mm)	D1_G (inch)	D3 (mm)	D4 (mm)	D5 (mm)	H (mm)	H1 (mm)	H2 (mm)	H3 (mm)	H4 (mm)	H5 (mm)	H7 (mm)	L (mm)	L2 (mm)	M
68	⅛	95	60	16	101	14	12	60	24	16	43	130	25	M6
96	⅛	105	70	16	132	18	12	73	25	16	57	150	25	M6
96	⅛	115	79	16	143	22	12	84	25	16	57	160	25	M6
120	⅛	140	89	16	173	26	15	99	26	26	69	180	45	M8
150	¼	150	98	16	193	32	15	119	36	26	88	200	45	M8
150	¼	165	121	19	205	39	15	132	36	26	88	230	45	M8

Lift = Hx (mm)
7
10
13
15
19
23

Diaphragm valves pneumatic DIASTAR TenPlus

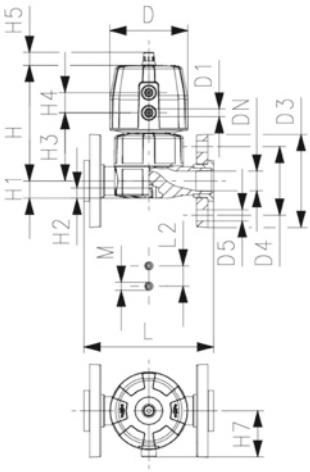

Diaphragm valve DIASTAR TenPlus PVC-C
FC (Fail safe to close)
With backing flanges PP-V Inch ANSI

Model:

- Double flow rate compared to predecessor
- One housing nut replaces four screws
- Rotating air connection at 90° intervals
- Flat sealing faces
- Overall length EN 558
- Connecting dimension: ANSI/ASME B 16.5 class 150, ASTM D 4024, BS 1560, BS EN 1759

Option:

- Individual configuration of the valve
- Comprehensive range of accessories available

* PN: PTFE
Working Pressure: **both sides**
* O-Ring material: FKM

d (mm)	DN (mm)	Size (inch)	PN (bar)	PN* (bar)	kv-value (Δp=1 bar) (l/min)	EPDM Code	SP	Weight (kg)
20	15	½	10	10*	125	**163 687 712**	1	1.123
25	20	¾	10	10*	271	**163 687 713**	1	1.290
32	25	1	10	10*	481	**163 687 714**	1	2.168
40	32	1 ¼	10	10*	759	**163 687 715**	1	3.656
50	40	1 ½	10	10*	1263	**163 687 716**	1	5.550
63	50	2	10	10*	1728	**163 687 717**	1	6.727

FKM Code	PTFE/ EPDM* Code	SP	Weight (kg)
163 687 762	**163 687 732**	1	1.151
163 687 763	**163 687 733**	1	1.290
163 687 764	**163 687 734**	1	2.189
163 687 765	**163 687 735**	1	3.677
163 687 766	**163 687 736**	1	5.579
163 687 767	**163 687 737**	1	6.755

D (mm)	D1_G (inch)	D3 (mm)	D4 (mm)	D5 (mm)	H (mm)	H1 (mm)	H2 (mm)	H3 (mm)	H4 (mm)	H5 (mm)	H7 (mm)	L (mm)	L2 (mm)	M
96	⅛	95	60	16	127	14	12	68	25	16	57	130	25	M6
96	⅛	105	70	16	132	18	12	73	25	16	57	150	25	M6
120	⅛	115	79	16	167	22	12	93	26	26	69	160	25	M6
150	¼	140	89	16	196	26	15	101	36	26	88	180	45	M8
180	¼	150	98	16	239	32	15	124	37	26	103	200	45	M8
180	¼	165	121	19	251	39	15	137	37	26	103	230	45	M8

Lift = Hx (mm)
7
10
13
15
19
23

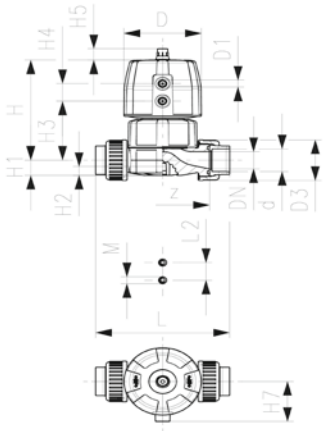

Diaphragm valve DIASTAR TenPlus PVC-C
FC (Fail safe to close)
Unions with solvent cement sockets ASTM

Model:

- Double flow rate compared to predecessor
- One housing nut replaces four screws
- Rotating air connection at 90° intervals
- For easy installation and removal
- Short overall length

Option:

- Individual configuration of the valve
- Comprehensive range of accessories available

* PN: PTFE
Working Pressure: **both sides**
* O-Ring material: FKM

d (mm)	DN (mm)	Size (inch)	PN (bar)	PN* (bar)	kv-value (Δp=1 bar) (l/min)	EPDM Code	SP	Weight (kg)
20	15	½	10	10*	125	**163 684 612**	1	1.004
25	20	¾	10	10*	271	**163 684 613**	1	1.140
32	25	1	10	10*	481	**163 684 614**	1	1.970
40	32	1 ¼	10	10*	759	**163 684 615**	1	3.331
50	40	1 ½	10	10*	1263	**163 684 616**	1	5.326
63	50	2	10	10*	1728	**163 684 617**	1	6.252

FKM Code	PTFE/ EPDM* Code	SP	Weight (kg)
163 684 662	**163 684 632**	1	0.992
163 684 663	**163 684 633**	1	1.117
163 684 664	**163 684 634**	1	1.941
163 684 665	**163 684 635**	1	3.271
163 684 666	**163 684 636**	1	5.240
163 684 667	**163 684 637**	1	6.087

D (mm)	D1_G (inch)	H (mm)	H1 (mm)	H2 (mm)	H3 (mm)	H4 (mm)	H5 (mm)	H7 (mm)	L (mm)	L2 (mm)	M	z (mm)	Lift = Hx (mm)
96	⅛	127	14	12	68	25	16	57	141	25	M6	96	7
96	⅛	132	18	12	73	25	16	57	165	25	M6	114	10
120	⅛	167	22	12	93	26	26	69	179	25	M6	122	13
150	¼	196	26	15	101	36	26	88	204	45	M8	140	15
180	¼	239	32	15	124	37	26	103	230	45	M8	160	19
180	¼	251	39	15	137	37	26	103	268	45	M8	190	23

Diaphragm valves DIASTAR big dimensions

Diaphragm valve type DIASTAR PVC-C
Series 025 FC (Fail safe to close)
With fixed flanges Inch ANSI

Model:

- Connecting dimension: ISO 7005 / EN 1092 / DIN 25 PN10 / BS4504
- With position indicator / Working pressure: **one side**

* With backing flanges PP-V
**** DN80, DN100 and DN150 fixed flanges metric and inch ANSI B16.5**

	d (mm)	Size (inch)	DN (mm)	PN (bar)	kv-value (Δp=1 bar) (l/min)	EPDM Code	FKM Code	PTFE/EPDM Code	Weight (kg)
*		2 ½	65	10	992	**199 025 637**	**199 025 471**	**199 025 667**	13.600
**	90	3	80	10	1700	**199 025 698**	**199 025 472**	**199 025 728**	17.973
**	110	4	100	6	2700	**199 025 699**	**199 025 473**	**199 025 729**	24.700

	D (mm)	D1_G (inch)	D2 (mm)	D3[M] (mm)	D4 (mm)	H (mm)	H1 (mm)	H2 (mm)	H3 (mm)	H4 (mm)	H5 (mm)	H6 (mm)	H7 (mm)	H9 (mm)	H10 (mm)
*	280	¼	185	8	145	344	148	24	46	100	129	195	298	46	15
**	280	¼	200	12	160	348	150	24	46	100	129	195	302	57	15
**	335	¼	225	12	180	395	176	24	46	100	129	195	349	69	20

	L (mm)	L2 (mm)
*	290	70
**	310	120
**	350	120

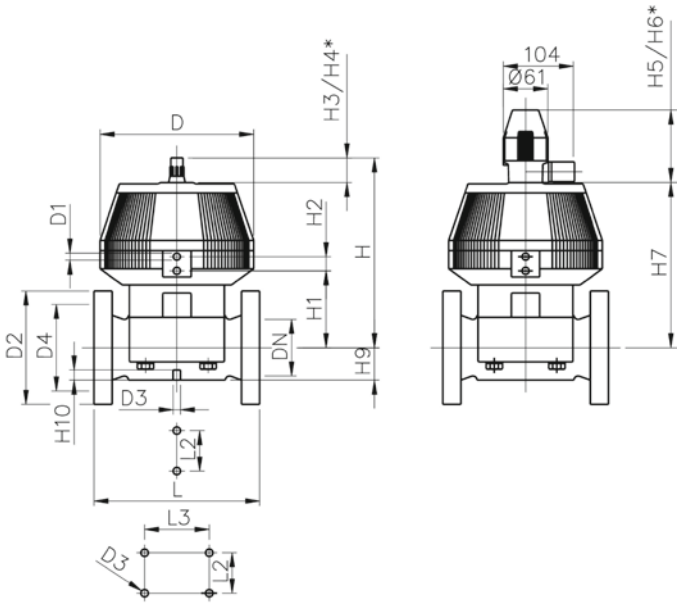

+GF+

Diaphragm valve type DIASTAR PVC-C
Series 025 FO (Fail safe to open)
With fixed flanges Inch ANSI

Model:

- Connecting dimension: ISO 7005 / EN 1092 / DIN 25 PN10 / BS4504
- With position indicator / Working pressure: **one side**

* With backing flanges PP-V

**** DN80, DN100 and DN150 fixed flanges metric and inch ANSI B16.5**

	d (mm)	Size (inch)	DN (mm)	PN (bar)	kv-value (Δp=1 bar) (l/min)	EPDM Code	Weight (kg)
**	90	3	80	10	1700	**199 025 708**	17.400
**	110	4	100	6	2700	**199 025 709**	24.700

	FKM Code	PTFE/EPDM Code	Weight (kg)
**	**199 025 475**	**199 025 738**	17.400
**	**199 025 476**	**199 025 679**	24.700

	D (mm)	D1_G (inch)	D2 (mm)	D3[M] (mm)	D4 (mm)	H (mm)	H1 (mm)	H2 (mm)	H3 (mm)	H4 (mm)	H5 (mm)	H6 (mm)	H7 (mm)	H9 (mm)	H10 (mm)
**	280	¼	200	12	160	348	150	24	46	100	129	195	302	57	15
**	335	¼	225	12	180	395	176	24	46	100	129	195	349	69	20

	L (mm)	L2 (mm)
**	310	120
**	350	120

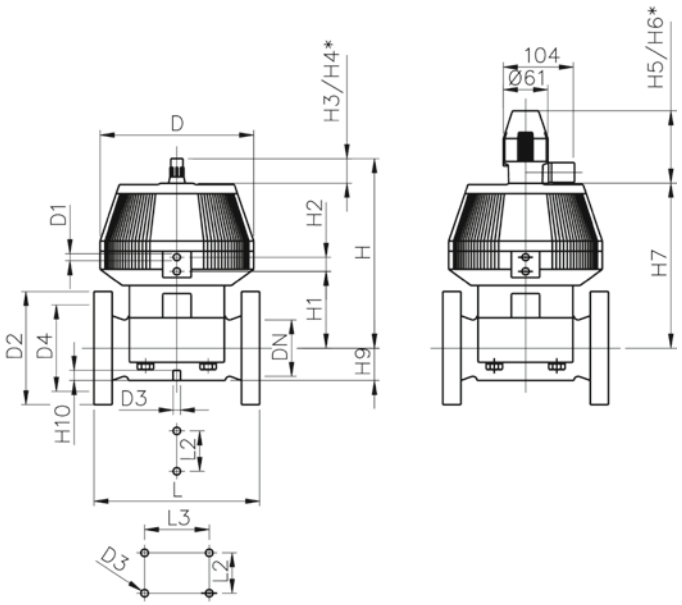

Diaphragm valve type DIASTAR PVC-C
Series 025 DA (Double acting)
With fixed flanges Inch ANSI

Model:

- Connecting dimension: ISO 7005 / EN 1092 / DIN 25 PN10 / BS4504
- With position indicator / Working pressure: **one side**

* With backing flanges PP-V
**** DN80, DN100 and DN150 fixed flanges metric and inch ANSI B16.5**

	d (mm)	Size (inch)	DN (mm)	PN (bar)	kv-value (Δp=1 bar) (l/min)	EPDM Code	Weight (kg)	FKM Code	PTFE/EPDM Code
*		2 ½	65	10	992	**199 025 657**	13.600	**199 025 477**	**199 025 687**

	D (mm)	D1_G (inch)	D2 (mm)	D3[M] (mm)	D4 (mm)	H (mm)	H1 (mm)	H2 (mm)	H3 (mm)	H4 (mm)	H5 (mm)	H6 (mm)	H7 (mm)	H9 (mm)	H10 (mm)
*	280	¼	185	8	145	344	148	24	46	100	129	195	298	46	15

	L (mm)	L2 (mm)
*	290	70

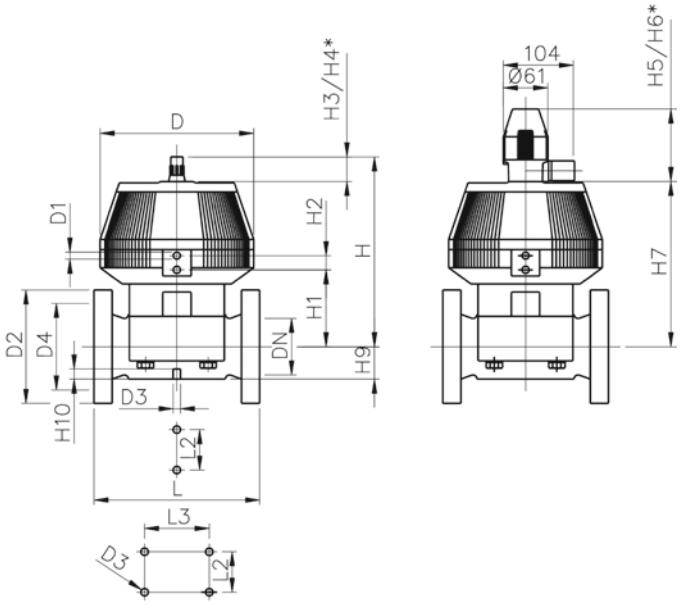

+GF+

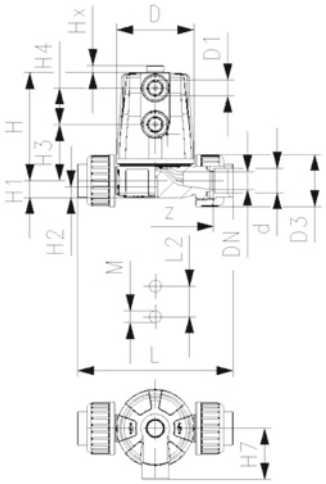

Diaphragm valve type 604 PVC-C
Unions with solvent cement socket ASTM

Model:

- Compact full plastic design without screws
- High flow rate
- Actuator housing with thread for easy maintenance
- Quick opening & closing times
- For easy installation and removal
- Market standard installation length

Option:

- Individual configuration of the valve

* O-Ring material: FKM

d (mm)	DN (mm)	Size (inch)	PN (bar)	kv-value (Δp=1 bar) (l/min)	Actuator	EPDM Code	PTFE/ EPDM* Code
20	15	½	6	125	FC	**163 604 612**	**163 604 632**
20	15	½	6	125	FO	**163 604 614**	**163 604 634**
20	15	½	6	125	DA	**163 604 615**	**163 604 635**

D (mm)	D1_G (inch)	D3 (mm)	H (mm)	H1 (mm)	H2 (mm)	H3 (mm)	H4 (mm)	H7 (mm)	L (mm)	L2 (mm)	M	z (mm)	Lift = Hx (mm)
65	¼	43	89	14	12	46	30	42	140.6	25	M6	96	6
65	¼	43	89	14	12	46	30	42	140.6	25	M6	96	6
65	¼	43	89	14	12	46	30	42	140.6	25	M6	96	6

Pressure reducing valves type 582

Pressure reducing valve type 582 PVC-C
Unions with solvent cement sockets ASTM
Without manometer

Model:

- Diaphragm PTFE/EPDM
- Integrated stainless steel mounting inserts
- 0.5-9.0 bar (7-130 psi)

0.3-3.0 bar (4-44 psi) on request
Manometer on request

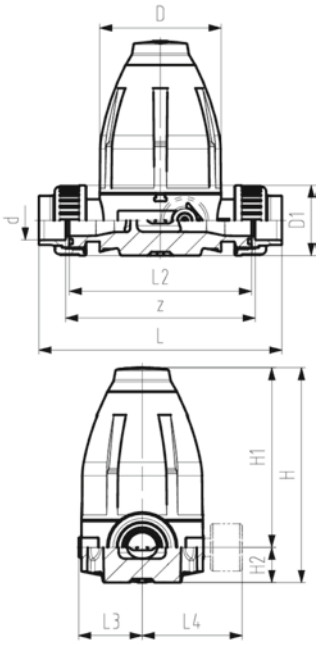

d (mm)	DN (mm)	Size (inch)	PN (bar)	O-rings EPDM Code	Weight (kg)	SP	O-rings FKM Code
20	15	½	10	**163 582 202**	0.730	1	**163 582 212**
25	20	¾	10	**163 582 203**	1.540	1	**163 582 213**
32	25	1	10	**163 582 204**	1.580	1	**163 582 214**
40	32	1 ¼	10	**163 582 205**	4.220	1	**163 582 215**
50	40	1 ½	10	**163 582 206**	4.410	1	**163 582 216**
63	50	2	10	**163 582 207**	4.660	1	**163 582 217**

D (mm)	D1 (mm)	H (mm)	H1 (mm)	H2 (mm)	H3 (mm)	L (mm)	L2 (mm)	L3 (mm)	M	z (mm)	Inch (inch)
79	43	132	111	21	12	171	120	42	M6	126	1/2
100	51	177	148	29	14	207	150	53	M6	156	3/4
100	58	177	148	29	14	214	150	53	M6	156	1
147	72	251	207	44	21	275	205	76	M8	211	1 1/4
147	83	251	207	44	21	281	205	76	M8	211	1 1/2
147	101	251	207	44	21	288	205	76	M8	211	2

Pressure reducing valve type 582 PVC-C
Unions with solvent cement sockets ASTM
With manometer

Model:

- Diaphragm PTFE/EPDM
- Integrated stainless steel mounting inserts
- 0.5-9.0 bar (7-130 psi)
- Attention: Manometer with brass connection in direct contact with medium. Check for chemical resistance, otherwise chose the optional manometer adapter for media separation.

0.3-3.0 bar (4-44 psi) on request

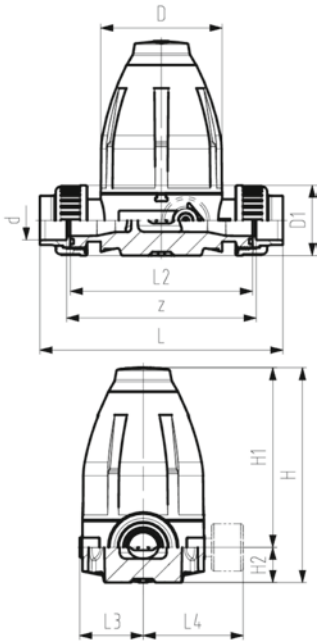

d (mm)	DN (mm)	Size (inch)	PN (bar)	O-rings EPDM Code	Weight (kg)	SP	O-rings FKM Code
20	15	½	10	**163 582 222**	0.760	1	**163 582 232**
25	20	¾	10	**163 582 223**	1.570	1	**163 582 233**
32	25	1	10	**163 582 224**	1.610	1	**163 582 234**
40	32	1 ¼	10	**163 582 225**	4.250	1	**163 582 235**
50	40	1 ½	10	**163 582 226**	4.440	1	**163 582 236**
63	50	2	10	**163 582 227**	4.690	1	**163 582 237**

D (mm)	D1 (mm)	H (mm)	H1 (mm)	H2 (mm)	H3 (mm)	L (mm)	L2 (mm)	L3 (mm)	L4 (mm)	M	z (mm)	Inch (inch)
79	43	132	111	21	12	171	120	42	77	M6	126	1/2
100	51	177	148	29	14	207	150	53	88	M6	156	3/4
100	58	177	148	29	14	214	150	53	88	M6	156	1
147	72	251	207	44	21	275	205	76	111	M8	211	1 1/4
147	83	251	207	44	21	281	205	76	111	M8	211	1 1/2
147	101	251	207	44	21	288	205	76	111	M8	211	2

Pressure retaining valves type 586

Pressure retaining valve type 586 PVC-C
Unions with solvent cement sockets ASTM
Without manometer

Model:

- Diaphragm PTFE/EPDM
- Integrated stainless steel mounting inserts
- 0.5-9.0 bar (7-130 psi)

0.3-3.0 bar (4-44 psi) on request
Manometer on request

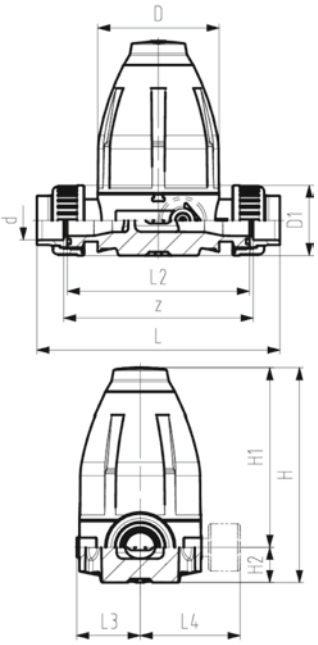

d (mm)	DN (mm)	Size (inch)	PN (bar)	O-rings EPDM Code	Weight (kg)	SP	O-rings FKM Code
20	15	½	10	**163 586 202**	0.720	1	**163 586 212**
25	20	¾	10	**163 586 203**	1.560	1	**163 586 213**
32	25	1	10	**163 586 204**	1.600	1	**163 586 214**
40	32	1 ¼	10	**163 586 205**	4.360	1	**163 586 215**
50	40	1 ½	10	**163 586 206**	4.430	1	**163 586 216**
63	50	2	10	**163 586 207**	4.690	1	**163 586 217**

D (mm)	D1 (mm)	H (mm)	H1 (mm)	H2 (mm)	H3 (mm)	L (mm)	L2 (mm)	L3 (mm)	M	z (mm)	Inch (inch)
79	43	132	111	21	12	171	120	42	M6	126	1/2
100	51	177	148	29	14	207	150	53	M6	156	3/4
100	58	177	148	29	14	214	150	53	M6	156	1
147	72	251	207	44	21	275	205	76	M8	211	1 1/4
147	83	251	207	44	21	281	205	76	M8	211	1 1/2
147	101	251	207	44	21	288	205	76	M8	211	2

Process control valves

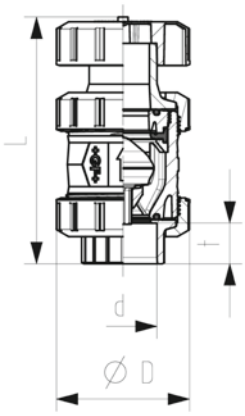

Ventilating and bleed valve Type 591 PVC-C
With solvent cement sockets Inch ASTM
Inclusive 2 threaded valve ends NPT

Model:

- With protection cap up to DN50 made of PP-GF, DN65-100 made of POM
- Floater made of PP-H
- Designed for easy installation and removal
- Compact installation length

DN (mm)	Thread Type	Size (inch)	PN (bar)	EPDM Code	FKM Code	D (mm)	L (mm)	t (mm)
10	NPT	⅜	16	**163 591 101**	**163 591 111**	50	111	19
15	NPT	½	16	**163 591 102**	**163 591 112**	50	119	23
20	NPT	¾	16	**163 591 103**	**163 591 113**	58	137	25
25	NPT	1	16	**163 591 104**	**163 591 114**	68	152	28
32	NPT	1 ¼	16	**163 591 105**	**163 591 115**	84	176	31
40	NPT	1 ½	16	**163 591 106**	**163 591 116**	97	193	35
50	NPT	2	16	**163 591 107**	**163 591 117**	124	229	38
65	NPT	2 ½	16	**163 591 108**	**163 591 118**	166	258	45
80	NPT	3	16	**163 591 109**	**163 591 119**	200	277	49
100	NPT	4	16	**163 591 110**	**163 591 120**	238	320	58

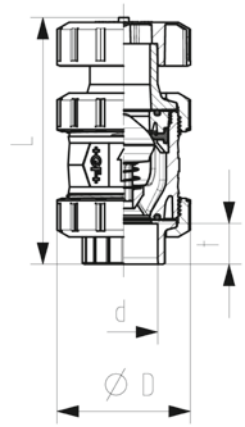

Ventilating valve type 595 PVC-C
With solvent cement sockets Inch ASTM
Inclusive 2 threaded valve ends NPT

Model:

- With protection cap up to DN50 made of PP-GF, DN65-100 made of POM
- Spring HALAR coated
- Spring available in other materials, see spare parts
- Designed for easy installation and removal
- Compact installation length

DN (mm)	Thread Type	Size (inch)	PN (bar)	EPDM Code	FKM Code	D (mm)	L (mm)	t (mm)
10	NPT	⅜	16	**163 595 101**	**163 595 111**	50	111	19
15	NPT	½	16	**163 595 102**	**163 595 112**	50	119	23
20	NPT	¾	16	**163 595 103**	**163 595 113**	58	137	25
25	NPT	1	16	**163 595 104**	**163 595 114**	68	152	28
32	NPT	1 ¼	16	**163 595 105**	**163 595 115**	84	176	31
40	NPT	1 ½	16	**163 595 106**	**163 595 116**	97	193	35
50	NPT	2	16	**163 595 107**	**163 595 117**	124	229	38
65	NPT	2 ½	16	**163 595 108**	**163 595 118**	166	258	45
80	NPT	3	16	**163 595 109**	**163 595 119**	200	277	49
100	NPT	4	16	**163 595 110**	**163 595 120**	238	320	58

Cone check valves

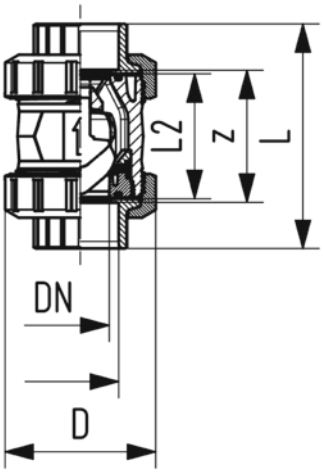

Check valve type 561 PVC-C
With solvent cement sockets Inch ASTM
Inclusive 2 threaded valve ends NPT

Model:

- Sealing at a minimum water column of 2 m
- Designed for easy installation and removal
- Vibration free even at high flow velocity
- Flow-optimized return cone, double guided
- For vertical installation
- Compact installation length, same as ball valve type 546
- Z-length, end connectors and union nuts **not** compatible with type 360
- New DN65-DN100

d (mm)	DN (mm)	Thread Type	Size (inch)	PN (bar)	kv-value (Δp=1 bar) (l/min)	EPDM Code	SP	Weight (kg)
16	10	NPT	⅜	16	190	**163 561 101**	1	0.120
20	15	NPT	½	16	180	**163 561 102**	1	0.130
25	20	NPT	¾	16	380	**163 561 103**	1	0.260
32	25	NPT	1	16	460	**163 561 104**	1	0.290
40	32	NPT	1 ¼	16	850	**163 561 105**	1	0.490
50	40	NPT	1 ½	16	1080	**163 561 106**	1	0.710
63	50	NPT	2	16	1670	**163 561 107**	1	1.460
75	65	NPT	2 ½	16	2950	**163 561 108**	1	3.500
90	80	NPT	3	16	3600	**163 561 109**	1	5.500
110	100	NPT	4	16	4150	**163 561 110**	1	8.820

FKM Code	SP	Weight (kg)	D (mm)	L (mm)	L2 (mm)	z (mm)
163 561 111	1	0.120	50	105	56	67
163 561 112	1	0.130	50	105	56	61
163 561 113	1	0.280	58	121	65	70
163 561 114	1	0.290	68	133	71	76
163 561 115	1	0.490	84	154	85	90
163 561 116	1	0.720	97	164	89	94
163 561 117	1	1.470	124	183	101	107
163 561 118	1	3.510	166	233	136	144
163 561 119	1	5.520	200	254	141	151
163 561 120	1	8.860	238	301	164	174

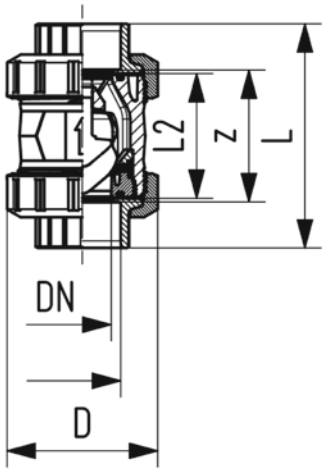

Check valve type 562 PVC-C
With solvent cement sockets Inch ASTM
Inclusive 2 threaded valve ends NPT

Model:

- For horizontal or vertical installation
- Sealing at a minimum water column of 1 m
- Spring loaded, spring made of stainless steel (1.4310)
- Spring available in other materials, see spare parts
- Designed for easy installation and removal
- Vibration free even at high flow velocity
- Flow-optimized return cone, double guided
- Compact installation length, same as ball valve type 546
- Z-length, end connectors and union nuts **not** compatible with type 360
- New DN65-DN100

NPT (inch)	DN (mm)	PN (bar)	kv-value (Δp=1 bar) (l/min)	EPDM Code	SP	Weight (kg)	FKM Code	SP	Weight (kg)
⅜	10	16	190	**163 562 101**	1	0.120	**163 562 111**	1	0.120
½	15	16	180	**163 562 102**	1	0.130	**163 562 112**	1	0.130
¾	20	16	380	**163 562 103**	1	0.260	**163 562 113**	1	0.280
1	25	16	460	**163 562 104**	1	0.290	**163 562 114**	1	0.290
1 ¼	32	16	850	**163 562 105**	1	0.490	**163 562 115**	1	0.490
1 ½	40	16	1080	**163 562 106**	1	0.710	**163 562 116**	1	0.720
2	50	16	1670	**163 562 107**	1	1.460	**163 562 117**	1	1.470
2 ½	65	16	2950	**163 562 108**	1	3.500	**163 562 118**	1	3.510
3	80	16	3600	**163 562 109**	1	5.500	**163 562 119**	1	5.520
4	100	16	4150	**163 562 110**	1	8.820	**163 562 120**	1	8.860

NPT (inch)	D (mm)	L (mm)	L2 (mm)	z (mm)
⅜	50	105	56	67
½	50	105	56	61
¾	58	121	65	70
1	68	133	71	76
1 ¼	84	154	85	90
1 ½	97	164	89	94
2	124	183	101	107
2 ½	166	233	136	144
3	200	254	141	151
4	238	301	164	174

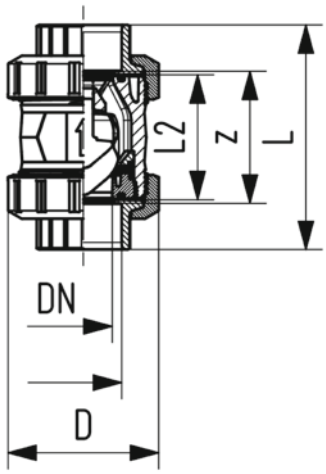

Check valve type 562 PVC-C
With solvent cement sockets Inch ASTM
Inclusive 2 threaded valve ends NPT
With PP-GF union nuts

Model:

- For horizontal or vertical installation
- Sealing at a minimum water column of 1 m
- Spring loaded, spring made of stainless steel (1.4310)
- Spring available in other materials, see spare parts
- Designed for easy installation and removal
- Vibration free even at high flow velocity
- Flow-optimized return cone, double guided
- Compact installation length, same as ball valve type 546
- Z-length, end connectors and union nuts **not** compatible with type 360
- New DN65-DN100

NPT (inch)	DN (mm)	PN (bar)	kv-value (Δp=1 bar) (l/min)	EPDM Code	SP	Weight (kg)	FKM Code	SP	Weight (kg)
⅜	10	16	190	**700 247 719**	1	0.120	**700 247 729**	1	0.120
½	15	16	180	**700 247 720**	1	0.130	**700 247 730**	1	0.130
¾	20	16	380	**700 247 721**	1	0.260	**700 247 731**	1	0.280
1	25	16	460	**700 247 722**	1	0.290	**700 247 732**	1	0.290
1 ¼	32	16	850	**700 247 723**	1	0.490	**700 247 733**	1	0.490
1 ½	40	16	1080	**700 247 724**	1	0.710	**700 247 734**	1	0.720
2	50	16	1670	**700 247 725**	1	1.460	**700 247 735**	1	1.470
2 ½	65	16	2950	**700 247 726**	1	3.500	**700 247 736**	1	3.510
3	80	16	3600	**700 247 727**	1	5.500	**700 247 737**	1	5.520
4	100	16	4150	**700 247 728**	1	8.820	**700 247 738**	1	8.860

NPT (inch)	D (mm)	L (mm)	L2 (mm)	z (mm)
⅜	50	105	56	67
½	50	105	56	61
¾	58	121	65	70
1	68	133	71	76
1 ¼	84	154	85	90
1 ½	97	164	89	94
2	124	183	101	107
2 ½	166	233	136	144
3	200	254	141	151
4	238	301	164	174

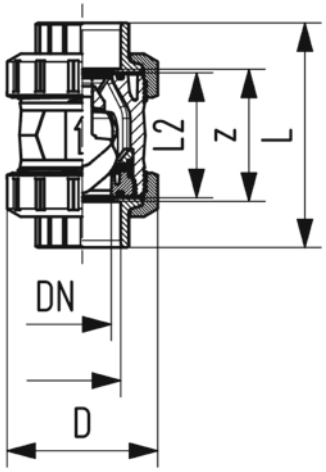

Check valve type 561 PVC-C
With solvent cement sockets Inch ASTM
Inclusive 2 threaded valve ends NPT
With PP-GF union nuts

Model:

- Sealing at a minimum water column of 2 m
- Designed for easy installation and removal
- Vibration free even at high flow velocity
- Flow-optimized return cone, double guided
- For vertical installation
- Compact installation length, same as ball valve type 546
- Z-length, end connectors and union nuts **not** compatible with type 360
- New DN65-DN100

d (mm)	DN (mm)	Thread Type	Size (inch)	PN (bar)	kv-value (Δp=1 bar) (l/min)	EPDM Code	SP	Weight (kg)	FKM Code	SP	Weight (kg)
16	10	NPT	⅜	16	190	**700 247 679**	1	0.120	**700 247 689**	1	0.120
20	15	NPT	½	16	180	**700 247 680**	1	0.130	**700 247 690**	1	0.130
25	20	NPT	¾	16	380	**700 247 681**	1	0.260	**700 247 691**	1	0.280
32	25	NPT	1	16	460	**700 247 682**	1	0.290	**700 247 692**	1	0.290
40	32	NPT	1 ¼	16	850	**700 247 683**	1	0.490	**700 247 693**	1	0.490
50	40	NPT	1 ½	16	1080	**700 247 684**	1	0.710	**700 247 694**	1	0.720
63	50	NPT	2	16	1670	**700 247 685**	1	1.460	**700 247 695**	1	1.470
75	65	NPT	2 ½	16	2950	**700 247 686**	1	3.500	**700 247 696**	1	3.510
90	80	NPT	3	16	3600	**700 247 687**	1	5.500	**700 247 697**	1	5.520
110	100	NPT	4	16	4150	**700 247 688**	1	8.820	**700 247 698**	1	8.860

D (mm)	L (mm)	L2 (mm)	z (mm)
50	105	56	67
50	105	56	61
58	121	65	70
68	133	71	76
84	154	85	90
97	164	89	94
124	183	101	107
166	233	136	144
200	254	141	151
238	301	164	174

PVC-C
ASTM / ANSI

silicon free/paint compatible

PVC-C - ASTM / ANSI - silicon free/paint compatible		Page
	Ball valves type 543 Pro	191
	Ball valves type 546 Pro	193
	Diaphragm valves type 517	194
	Cone check valves	195

Ball valves type 543 Pro

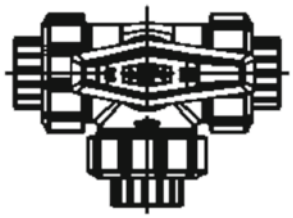

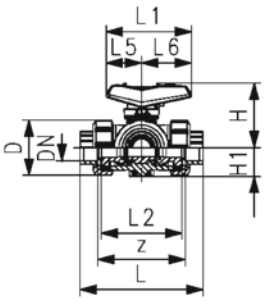

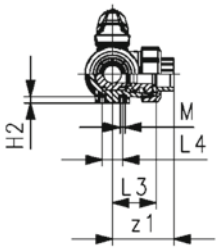

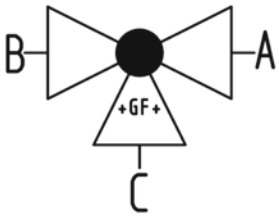

3-Way Ball Valve Type 543 Pro PVC-C silicone free
Horizontal/L-port
With solvent cement sockets ASTM

Model:

- Lockable lever as standard (DN10-DN50)
- Silicone free/paint-compatible
- For easy installation and removal (valve end and union nut are compatible with type 546)
- Ball seat PTFE
- Angle of operation 360° without turn limiter
- Turn limiter 90° enclosed, in different positions usable as a clip-on ring
- Integrated stainless steel mounting inserts
- Delivery status A-C opened, see flow scheme
- Z-dimension, valve end and union nut are compatible with type 543 (1stGeneration)

Option:

- Interface-module with position feedback sensor, incl. LED feedback (DN10-50)
- Manual spring return lever ("Dead man") (DN10-25)
- Pneumatic or electric actuators from GF
- Individual configuration of the valve possible

Size (inch)	DN (mm)	PN (bar)	kv-value (Δp=1 bar) (l/min)	EPDM Code	SP	Weight (kg)	FKM Code	SP	Weight (kg)
⅜	10	10	50	**163 543 161**	1	0.265	**163 543 171**	1	0.265
½	15	10	75	**163 543 162**	1	0.272	**163 543 172**	1	0.272
¾	20	10	150	**163 543 163**	1	0.391	**163 543 173**	1	0.391
1	25	10	280	**163 543 164**	1	0.598	**163 543 174**	1	0.598
1 ¼	32	10	480	**163 543 165**	1	1.018	**163 543 175**	1	1.018
1 ½	40	10	620	**163 543 166**	1	1.509	**163 543 176**	1	1.509
2	50	10	1230	**163 543 167**	1	2.938	**163 543 177**	1	2.938

Size (inch)	D (mm)	H (mm)	H1 (mm)	H2 (mm)	L (mm)	L1 (mm)	L2 (mm)	L3 (mm)	L4 (mm)	L5 (mm)	L6 (mm)	M	z (mm)	z1 (mm)
⅜	50	61	28	8	123	82	73	36	25	35	47	6	85	42
½	50	61	28	8	122	82	73	36	25	35	47	6	77	38
¾	58	74	32	8	141	106	86	43	25	44	62	6	92	46
1	68	80	36	8	161	106	99	50	25	44	62	6	105	53
1 ¼	84	95	45	9	187	131	120	60	45	57	74	8	126	63
1 ½	97	102	51	9	213	131	137	69	45	57	74	8	143	72
2	124	117	65	9	261	152	179	89	45	66	86	8	185	92

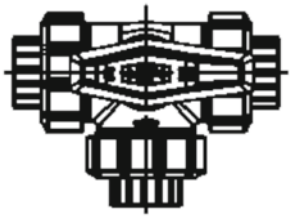

3-Way ball valve type 543 Pro PVC-C silicone free
Horizontal/T-port
With solvent cement sockets ASTM

Model:

- Lockable lever as standard (DN10-DN50)
- Silicone free/paint-compatible
- For easy installation and removal (valve end and union nut are compatible with type 546)
- Ball seat PTFE
- Angle of operation 360° without turn limiter
- Turn limiter 90° enclosed, in different positions usable as a clip-on ring
- Integrated stainless steel mounting inserts
- Delivery status A-B-C opened, see flow scheme
- Z-dimension, valve end and union nut are compatible with type 543 (1stGeneration)

Option:

- Interface-module with position feedback sensor, incl. LED feedback (DN10-50)
- Manual spring return lever ("Dead man") (DN10-25)
- Pneumatic or electric actuators from GF
- Individual configuration of the valve possible

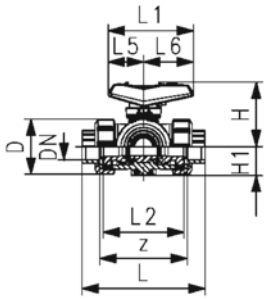

DN (mm)	Size (inch)	PN (bar)	kv-value (Δp=1 bar) (l/min)	EPDM Code	SP	Weight (kg)	FKM Code	SP	Weight (kg)
10	⅜	10	140	**163 543 361**	1	0.264	**163 543 371**	1	0.264
15	½	10	200	**163 543 362**	1	0.271	**163 543 372**	1	0.271
20	¾	10	470	**163 543 363**	1	0.389	**163 543 373**	1	0.389
25	1	10	793	**163 543 364**	1	0.590	**163 543 374**	1	0.590
32	1 ¼	10	1290	**163 543 365**	1	1.007	**163 543 375**	1	1.007
40	1 ½	10	1910	**163 543 366**	1	1.487	**163 543 376**	1	1.487
50	2	10	3100	**163 543 367**	1	2.889	**163 543 377**	1	2.889

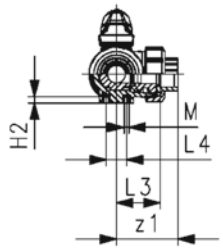

D (mm)	H (mm)	H1 (mm)	H2 (mm)	L (mm)	L1 (mm)	L2 (mm)	L3 (mm)	L4 (mm)	L5 (mm)	L6 (mm)	M	z (mm)	z1 (mm)
50	61	28	8	123	82	73	36	25	35	47	6	85	42
50	61	28	8	122	82	73	36	25	35	47	6	77	38
58	74	32	8	141	106	86	43	25	44	62	6	92	46
68	80	36	8	161	106	99	50	25	44	62	6	105	53
84	95	45	9	187	131	120	60	45	57	74	8	126	63
97	102	51	9	213	131	137	69	45	57	74	8	143	72
124	117	65	9	261	152	179	89	45	66	86	8	185	92

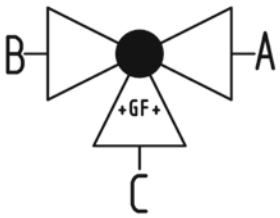

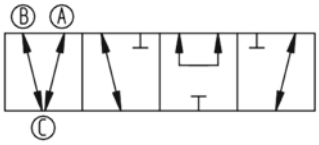

Ball valves type 546 Pro

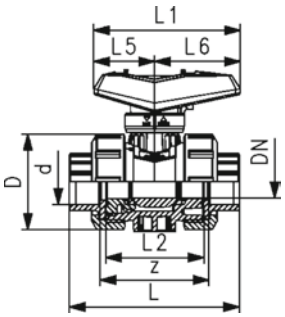

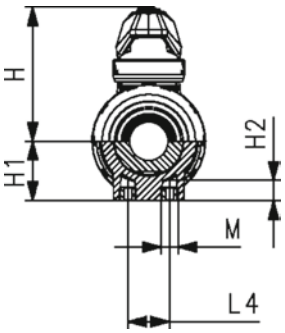

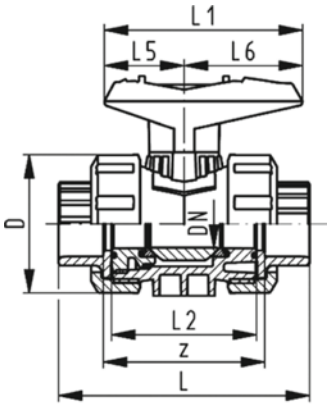

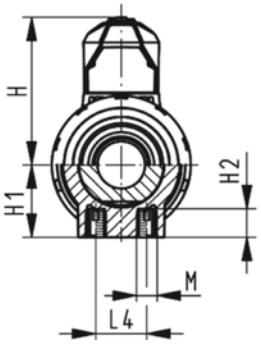

Ball valve type 546 Pro PVC-C silicone free
With solvent cement sockets Inch ASTM

Model:

- Silicon free
- Lockable lever as standard (DN10-DN50)
- For easy installation and removal
- Ball seat PVDF
- Integrated stainless steel mounting inserts
- Z-dimension, valve end and union nut **are compatible** with type 546 (1st Generation)

Option:

- Interface-module with position feedback sensor, incl. LED feedback (DN10-50)
- Manual spring return lever ("Dead man") (DN10-25)
- Pneumatic or electric actuators from GF
- Individual configuration of the valve possible
- Multifunctional module with integrated limit switches (DN65-100)

d (mm)	DN (mm)	Size (inch)	PN (bar)	kv-value (Δp=1 bar) (l/min)	EPDM Code	SP	Weight (kg)	FKM Code	SP	Weight (kg)
20	15	½	16	185	**163 546 842**	1	0.164	**163 546 852**	1	0.164
25	20	¾	16	350	**163 546 843**	1	0.249	**163 546 853**	1	0.249
32	25	1	16	700	**163 546 844**	1	0.369	**163 546 854**	1	0.369
40	32	1 ¼	16	1000	**163 546 845**	1	0.670	**163 546 855**	1	0.670
50	40	1 ½	16	1600	**163 546 846**	1	0.900	**163 546 856**	1	0.900
63	50	2	16	3100	**163 546 847**	1	1.660	**163 546 857**	1	1.660
75	65	2 ½	16	5000	**800 073 483**	1	6.000	**163 546 698**	1	5.300
90	80	3	16	7000	**800 062 444**	1	8.600	**163 546 699**	1	7.900
110	100	4	16	11000	**800 073 484**	1	13.800	**163 546 700**	1	12.600

D (mm)	H (mm)	H1 (mm)	H2 (mm)	L (mm)	L1 (mm)	L2 (mm)	L4 (mm)	L5 (mm)	L6 (mm)	M	z (mm)
50	57	27	12	95	82	56	25	35	47	6	67
58	74	30	12	110	106	65	25	44	62	M6	76
68	80	36	12	123	106	71	25	44	62	6	82
84	95	44	15	146	131	85	45	57	74	M8	98
97	102	51	15	157	131	89	45	57	74	M8	99
124	117	64	15	183	152	101	45	66	86	M8	111
166	150	85	15	233	270	136	70	64	206	M8	148
200	161	105	15	255	270	141	70	64	206	M8	163
238	178	123	22	301	320	164	120	64	256	M12	178

Diaphragm valves type 517

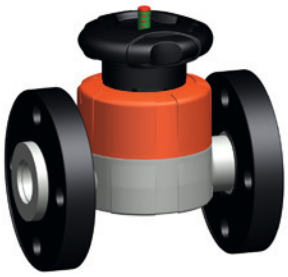

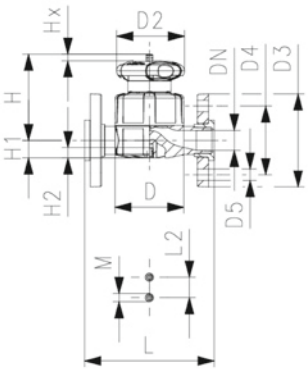

Diaphragm valve type 517 PVC-C SF
With backing flanges PP-V Inch ANSI

Model:

- Silicone free/paint-compatible
- Double flow rate compared to predecessor
- One housing nut replaces four screws
- Handwheel with built-in locking mechanism
- Flat sealing faces
- Overall length EN 558
- Connecting dimension: ANSI/ASME B 16.5 class 150, ASTM D 4024, BS 1560, BS EN 1759

Option:

- Individual configuration of the valve
- Self adjusting multifunctional module with integrated limit switches

* O-Ring material: FKM

Size (inch)	DN (mm)	PN (bar)	kv-value (Δp=1 bar) (l/min)	EPDM Code	SP	Weight (kg)	PTFE/ EPDM* Code	SP	Weight (kg)
½	15	10	125	**163 517 722**	1	0.528	**163 517 772**	1	0.528
¾	20	10	271	**163 517 723**	1	0.695	**163 517 773**	1	0.695
1	25	10	481	**163 517 724**	1	1.388	**163 517 774**	1	1.409
1 ¼	32	10	759	**163 517 725**	1	1.797	**163 517 775**	1	1.818
1 ½	40	10	1263	**163 517 726**	1	2.854	**163 517 776**	1	2.883
2	50	10	1728	**163 517 727**	1	4.022	**163 517 777**	1	4.050

Size (inch)	D (mm)	D2 (mm)	D3 (mm)	D4 (mm)	D5 (mm)	H (mm)	H1 (mm)	H2 (mm)	L (mm)	L2 (mm)	M	Lift = Hx (mm)
½	65	65	95	60	16	73	14	12	130	25	M6	7
¾	80	65	105	70	16	81	18	12	150	25	M6	10
1	88	87	115	79	16	107	22	12	160	25	M6	13
1 ¼	101	87	140	89	16	115	26	15	180	45	M8	15
1 ½	117	135	150	98	16	148	32	15	200	45	M8	19
2	144	135	165	121	19	166	39	15	230	45	M8	25

Cone check valves

Check valve type 561 (without spring) PVC-C silicone free
With solvent cement sockets Inch ASTM

Model:

- Sealing at a minimum water column of 2 m
- Silicone free/paint-compatible
- Designed for easy installation and removal
- Vibration free even at high flow velocity
- Flow-optimized return cone, double guided
- For vertical installation
- Compact installation length, same as ball valve type 546
- Z-length, end connectors and union nuts **not** compatible with type 360
- New DN65-DN100

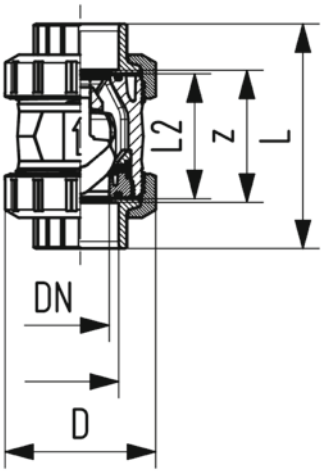

DN (mm)	Size (inch)	PN (bar)	kv-value (Δp=1 bar) (l/min)	EPDM Code	SP	Weight (kg)	FKM Code	SP	Weight (kg)
10	⅜	16	190	**163 561 241**	1	0.120	**163 561 251**	1	0.120
15	½	16	180	**163 561 242**	1	0.130	**163 561 252**	1	0.130
20	¾	16	380	**163 561 243**	1	0.260	**163 561 253**	1	0.280
25	1	16	460	**163 561 244**	1	0.290	**163 561 254**	1	0.290
32	1 ¼	16	850	**163 561 245**	1	0.490	**163 561 255**	1	0.490
40	1 ½	16	1080	**163 561 246**	1	0.710	**163 561 256**	1	0.720
50	2	16	1670	**163 561 247**	1	1.460	**163 561 257**	1	1.470
65	2 ½	16	2950	**163 561 248**	1	3.500	**163 561 258**	1	3.510
80	3	16	3600	**163 561 249**	1	5.500	**163 561 259**	1	5.520
100	4	16	4150	**163 561 250**	1	8.820	**163 561 260**	1	8.860

D (mm)	L (mm)	L2 (mm)	z (mm)
50	105	56	67
50	105	56	61
58	121	65	70
68	133	71	76
84	154	85	90
97	164	89	94
124	183	101	107
166	233	136	144
200	254	141	151
238	301	164	174

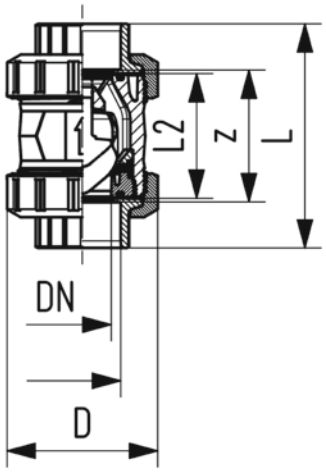

Check valve type 562 PVC-C silicone free
With solvent cement sockets Inch ASTM

Model:

- For horizontal or vertical installation
- Sealing at a minimum water column of 1 m
- Silicone free/paint-compatible
- Spring loaded, spring made of stainless steel (1.4310)
- Spring available in other materials, see spare parts
- Designed for easy installation and removal
- Vibration free even at high flow velocity
- Flow-optimized return cone, double guided
- Compact installation length, same as ball valve type 546
- Z-length, end connectors and union nuts **not** compatible with type 360
- New DN65-DN100

Size (inch)	DN (mm)	PN (bar)	kv-value (Δp=1 bar) (l/min)	EPDM Code	SP	Weight (kg)	FKM Code	SP	Weight (kg)
⅜	10	16	190	**163 562 241**	1	0.120	**163 562 251**	1	0.120
½	15	16	180	**163 562 242**	1	0.130	**163 562 252**	1	0.130
¾	20	16	380	**163 562 243**	1	0.260	**163 562 253**	1	0.280
1	25	16	460	**163 562 244**	1	0.290	**163 562 254**	1	0.290
1 ¼	32	16	850	**163 562 245**	1	0.490	**163 562 255**	1	0.490
1 ½	40	16	1080	**163 562 246**	1	0.710	**163 562 256**	1	0.720
2	50	16	1670	**163 562 247**	1	1.460	**163 562 257**	1	1.470
2 ½	65	16	2950	**163 562 248**	1	3.500	**163 562 258**	1	3.510
3	80	16	3600	**163 562 249**	1	5.500	**163 562 259**	1	5.520
4	100	16	4150	**163 562 250**	1	8.820	**163 562 260**	1	8.860

Size (inch)	D (mm)	L (mm)	L2 (mm)	z (mm)
⅜	50	105	56	67
½	50	105	56	61
¾	58	121	65	70
1	68	133	71	76
1 ¼	84	154	85	90
1 ½	97	164	89	94
2	124	183	101	107
2 ½	166	233	136	144
3	200	254	141	151
4	238	301	164	174

PVC-C
JIS

PVC-C - JIS		Page
	Ball valves type 543 Pro	199
	Ball valves type 546 Pro	201

Ball valves type 543 Pro

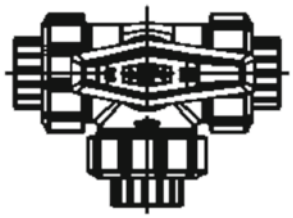

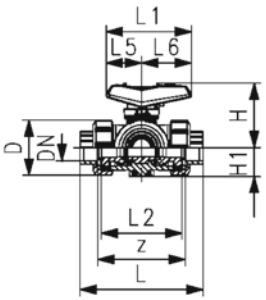

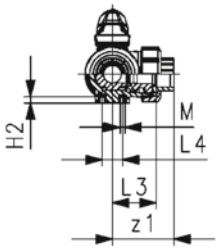

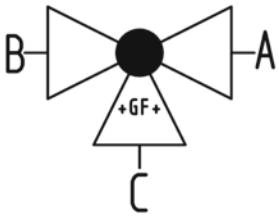

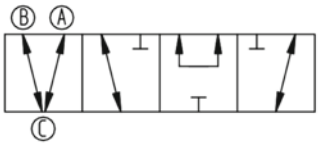

3-Way ball valve type 543 Pro PVC-C
Horizontal/T-port
With solvent cement sockets JIS

Model:

- Lockable lever as standard (DN10-DN50)
- For easy installation and removal (valve end and union nut are compatible with type 546)
- Ball seat PTFE
- Angle of operation 360° without turn limiter
- Turn limiter 90° enclosed, in different positions usable as a clip-on ring
- Integrated stainless steel mounting inserts
- Delivery status A-B-C opened, see flow scheme
- Z-dimension, valve end and union nut are compatible with type 543 (1stGeneration)

Option:

- Interface-module with position feedback sensor, incl. LED feedback (DN10-50)
- Manual spring return lever ("Dead man") (DN10-25)
- Pneumatic or electric actuators from GF
- Individual configuration of the valve possible

d (mm)	DN (mm)	Size (inch)	PN (bar)	kv-value (Δp=1 bar) (l/min)	EPDM Code	SP	Weight (kg)	FKM Code	SP	Weight (kg)
20	15	½	10	200	**163 543 322**	1	0.271	**163 543 332**	1	0.271
25	20	¾	10	470	**163 543 323**	1	0.389	**163 543 333**	1	0.389
32	25	1	10	793	**163 543 324**	1	0.590	**163 543 334**	1	0.590
40	32	1 ¼	10	1290	**163 543 325**	1	1.007	**163 543 335**	1	1.007
50	40	1 ½	10	1910	**163 543 326**	1	1.487	**163 543 336**	1	1.487
63	50	2	10	3100	**163 543 327**	1	2.889	**163 543 337**	1	2.889

D (mm)	H (mm)	H1 (mm)	H2 (mm)	L (mm)	L1 (mm)	L2 (mm)	L3 (mm)	L4 (mm)	L5 (mm)	L6 (mm)	M	z (mm)	z1 (mm)
50	61	28	8	112	82	73	36	25	35	47	6	81	40
58	74	32	8	131	106	86	43	25	44	62	6	94	47
68	80	36	8	151	106	99	50	25	44	62	6	107	54
84	95	45	9	181	131	120	60	45	57	74	8	130	65
97	102	51	9	205	131	137	69	45	57	74	8	143	72
124	117	65	9	261	152	179	89	45	66	86	8	185	92

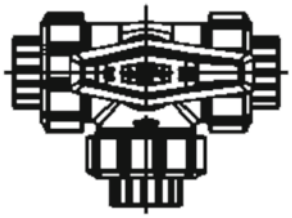

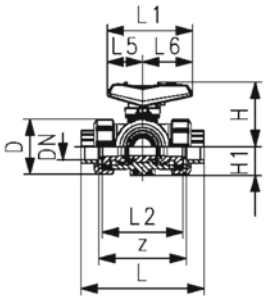

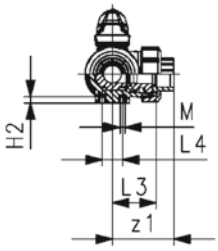

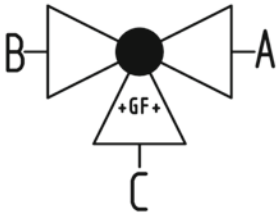

3-Way ball valve type 543 Pro PVC-C
Horizontal/L-port
With solvent cement sockets JIS

Model:

- Lockable lever as standard (DN10-DN50)
- For easy installation and removal (valve end and union nut are compatible with type 546)
- Ball seat PTFE
- Angle of operation 360° without turn limiter
- Turn limiter 90° enclosed, in different positions usable as a clip-on ring
- Integrated stainless steel mounting inserts
- Delivery status A-C opened, see flow scheme
- Z-dimension, valve end and union nut are compatible with type 543 (1stGeneration)

Option:

- Interface-module with position feedback sensor, incl. LED feedback (DN10-50)
- Manual spring return lever ("Dead man") (DN10-25)
- Pneumatic or electric actuators from GF
- Individual configuration of the valve possible

d (mm)	DN (mm)	Size (inch)	PN (bar)	kv-value (Δp=1 bar) (l/min)	EPDM Code	SP	Weight (kg)	FKM Code	SP	Weight (kg)
20	15	½	10	75	**163 543 122**	1	0.272	**163 543 132**	1	0.272
25	20	¾	10	150	**163 543 123**	1	0.391	**163 543 133**	1	0.391
32	25	1	10	280	**163 543 124**	1	0.598	**163 543 134**	1	0.598
40	32	1 ¼	10	480	**163 543 125**	1	1.018	**163 543 135**	1	1.018
50	40	1 ½	10	620	**163 543 126**	1	1.509	**163 543 136**	1	1.509
63	50	2	10	1230	**163 543 127**	1	2.938	**163 543 137**	1	2.938

D (mm)	H (mm)	H1 (mm)	H2 (mm)	L (mm)	L1 (mm)	L2 (mm)	L3 (mm)	L4 (mm)	L5 (mm)	L6 (mm)	M	z (mm)	z1 (mm)
50	61	28	8	112	82	73	36	25	35	47	6	81	40
58	74	32	8	131	106	86	43	25	44	62	6	94	47
68	80	36	8	151	106	99	50	25	44	62	6	107	54
84	95	45	9	181	131	120	60	45	57	74	8	130	65
97	102	51	9	205	131	137	69	45	57	74	8	143	72
124	117	65	9	261	152	179	89	45	66	86	8	185	92

Ball valves type 546 Pro

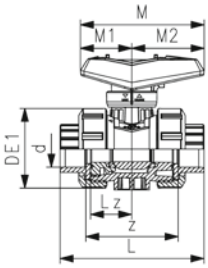

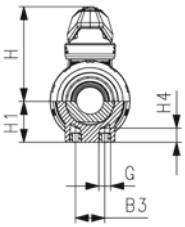

PVC-C Ball Valve type 546 Pro
With solvent cement sockets PVC-C JIS

Model:

- Lockable lever as standard
- Ball seat PTFE
- Integrated stainless steel mounting inserts
- z-dimension, valve end and union nut are compatible with type 546 (1st Generation)

Option:

- Interface module for position feedback sensor with LED (PNP, NPN and NAMUR)
- Manual spring return lever ("Dead man") (DN10-25)
- Pneumatic or electric actuators from GF
- Individual configuration of valves possible

d (mm)	DN (mm)	Size (inch)	PN (bar)	kv-value (Δp=1 bar) (l/min)	EPDM Code	SP	Weight (kg)	FKM Code	SP	Weight (kg)
20	15	½	16	185	**163 546 422**	1	0.160	**163 546 432**	1	0.160
25	20	¾	16	350	**163 546 423**	1	0.256	**163 546 433**	1	0.245
32	25	1	16	700	**163 546 424**	1	0.370	**163 546 434**	1	0.365
40	32	1 ¼	16	1000	**163 546 425**	1	0.660	**163 546 435**	1	0.665
50	40	1 ½	16	1600	**163 546 426**	1	0.907	**163 546 436**	1	0.926
63	50	2	16	3100	**163 546 427**	1	1.679	**163 546 437**	1	1.703
75	65	2 ½	16	5000	**163 546 428**	1	5.300	**163 546 438**	1	5.300
90	80	3	16	7000	**163 546 429**	1	8.000	**163 546 439**	1	8.000
110	100	4	16	11000	**163 546 430**	1	12.500	**163 546 440**	1	12.500

d (mm)	B3 (mm)	DE1 (mm)	G (mm)	H (mm)	H1 (mm)	H4 (mm)	L (mm)	Lz (mm)	M (mm)	M1 (mm)	M2 (mm)	z (mm)
20	25	50	M6	60.5	27	12	95	28	82	35.0	47	64
25	25	58	M6	74.0	30	12	110	33	106	44.0	62	72
32	25	68	M6	80.0	36	12	123	36	106	44.0	62	79
40	45	84	M8	95.0	44	15	146	43	131	57.0	74	94
50	45	97	M8	101.5	51	15	157	45	131	57.0	74	95
63	45	124	M8	116.5	64	15	183	51	152	66.0	85	107
75	70	166	M8	169.0	85	15	233	68	270	64.0	205	144
90	70	200	M8	180.0	105	15	254	71	270	64.0	205	151
110	120	238	M12	194.0	123	22	301	82	326	71.0	255	174

PVC-C JIS oil free

Ball valves type 546 Pro

PVC-C Ball Valve type 546 Pro
Oil-free
With solvent cement sockets PVC-C JIS

Model:

- Lockable lever as standard
- Ball seat PTFE
- Integrated stainless steel mounting inserts
- z-dimension, valve end and union nut are compatible with type 546 (1st Generation)

Option:

- Interface module for position feedback sensor with LED (PNP, NPN and NAMUR)
- Manual spring return lever "Dead man" (DN10-25)
- Pneumatic or electric actuators from GF
- Individual configuration of valves possible

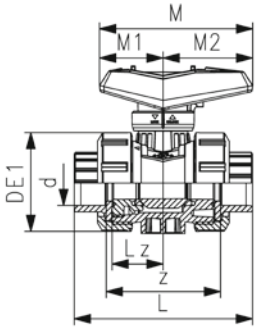

d (mm)	DN (mm)	Size (inch)	PN (bar)	kv-value (Δp=1 bar) (l/min)	EPDM Code	SP	Weight (kg)	FKM Code	SP	Weight (kg)
20	15	½	16	185	**163 546 902**	1	0.160	**163 546 912**	1	0.160
25	20	¾	16	350	**163 546 903**	1	0.245	**163 546 913**	1	0.245
32	25	1	16	700	**163 546 904**	1	0.257	**163 546 914**	1	0.375
40	32	1 ¼	16	1000	**163 546 905**	1	0.659	**163 546 915**	1	0.660
50	40	1 ½	16	1600	**163 546 906**	1	0.890	**163 546 916**	1	0.890
63	50	2	16	3100	**163 546 907**	1	1.688	**163 546 917**	1	1.650
75	65	2 ½	16	5000	**163 546 908**	1	5.300	**163 546 918**	1	5.300
90	80	3	16	7000	**163 546 909**	1	8.000	**163 546 919**	1	8.000
110	100	4	16	11000	**163 546 910**	1	12.500	**163 546 920**	1	12.500

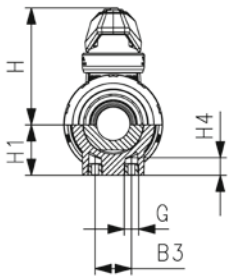

d (mm)	B3 (mm)	DE1 (mm)	G (mm)	H (mm)	H1 (mm)	H4 (mm)	L (mm)	Lz (mm)	M (mm)	M1 (mm)	M2 (mm)	z (mm)
20	25	50	M6	60.5	27	12	95	28	82	35	47	64
25	25	58	M6	74.0	30	12	110	33	106	44	62	72
32	25	68	M6	80.0	36	12	123	36	106	44	62	79
40	45	84	M8	95.0	44	15	146	43	131	57	74	94
50	45	97	M8	101.5	51	15	157	45	131	57	74	95
63	45	124	M8	116.5	64	15	183	51	152	66	86	107
75	70	166	M8	169.0	85	15	233	68	270	64	205	144
90	70	200	M8	180.0	105	15	254	71	270	64	205	151
110	120	238	M12	194.0	123	22	301	82	326	71	255	174

Electric & pneumatic actuators

Electric actuators

Electric actuator type EA15/25/45/120/250

Model:

- Heating element, position feedback (Open/Close/ Middle)
- All: Adjustable heater and 7-segment error LED included
- EA15: control and position feedback open/close
- EA25 - 250: control open/close/middle; positon feedback open/close/middle ready to operate
- cUL E247458
- IP68 Rating

Option:

- All: Fail-safe return unit
- EA25-250: Monitoring board, Positioner, Profibus DP board, Modbus TCP EA 25-250 Ethernet Interface Card

*with adapter 198 000 587 F05 / SW 11, 198 204 057 F05 / SW 14

Type of actuator	Voltage	Torque nominal	Torque maximal	Interfaces	Code
EA15	100-230V AC	10 Nm	20 Nm	F05 (SW 11/14)*	**198 153 180**
EA15	24V AC/DC	10 Nm	20 Nm	F05 (SW 11/14)*	**198 153 181**
EA25	100-230V AC	10 Nm	25 Nm	F05 (SW 11/14)*	**198 153 182**
EA25	24V AC/DC	10 Nm	25 Nm	F05 (SW 11/14)*	**198 153 183**
EA45	100-230V AC	20 Nm	45 Nm	F05 (SW 11/14)*	**198 153 184**
EA45	24V AC/DC	20 Nm	45 Nm	F05 (SW 11/14)*	**198 153 185**
EA120	100-230V AC	60 Nm	120 Nm	F07 (SW17)	**198 153 186**
EA120	24V AC/DC	60 Nm	120 Nm	F07 (SW17)	**198 153 187**
EA250	100-230V AC	100 Nm	250 Nm	F07 (SW22)	**198 153 188**
EA250	24V AC/DC	100 Nm	250 Nm	F07 (SW22)	**198 153 189**
EA15 cUL marked	100-230V AC	10 Nm	20 Nm	F05 (SW 11/14)*	**198153200**
EA15 cUL marked	24V AC/DC	10 Nm	20 Nm	F05 (SW 11/14)*	**198 153 201**
EA25 UL marked	100-230V AC	10 Nm	25 Nm	F05 (SW 11/14)*	**198 153 202**
EA25 cUL marked	24V AC/DC	10 Nm	25 Nm	F05 (SW 11/14)*	**198 153 203**
EA45 cUL marked	100-230V AC	20 Nm	45 Nm	F05 (SW 11/14)*	**198 153 204**
EA45 cUL marked	24V AC/DC	20 Nm	45 Nm	F05 (SW 11/14)*	**198 153 205**
EA120 cUL marked	100-230V AC	60 Nm	120 Nm	F07 (SW17)	**198 153 206**
EA120 cUL marked	24V AC/DC	60 Nm	120 Nm	F07 (SW17)	**198 153 207**
EA250 cUL marked	100-230V AC	100 Nm	250 Nm	F07 (SW22)	**198 153 208**
EA250 cUL marked	24V AC/DC	100 Nm	250 Nm	F07 (SW22)	**198 153 209**

Type of actuator	H1 (mm)	H2 (mm)	L1 (mm)	L2 (mm)	L3 (mm)	L4 (mm)	L5 (mm)	L6 (mm)	L7 (mm)	L8 (mm)	L9 (mm)
EA15	137	158	122	83.0	77	64.3	122	16	49		33
EA15	137	158	122	83.0	77	64.3	122	16	49		33
EA25	167	188	150	82.5	107	64.3	122	16	49	33	33
EA25	167	188	150	82.5	107	64.3	122	16	49	33	33
EA45	167	188	150	82.5	107	64.3	122	16	49	33	33
EA45	167	188	150	82.5	107	64.3	122	16	49	33	33
EA120	190	212	150	82.5	107	64.3	122	16	49	33	33
EA120	190	212	150	82.5	107	64.3	122	16	49	33	33
EA250	200	221	150	82.5	107	64.3	122	16	49	33	33
EA250	200	221	150	82.5	107	64.3	122	16	49	33	33
EA15 cUL marked	167	189	150	78.0	108	64.0	122	16	49	33	33
EA15 cUL marked	167	189	150	78.0	108	64.0	122	16	49	33	33
EA25 UL marked	167	189	150	83.0	98	64.0	122	16	49	33	33
EA25 cUL marked	167	189	150	83.0	98	64.0	122	16	49	33	33
EA45 cUL marked	167	189	150	83.0	98	64.0	122	16	49	33	33
EA45 cUL marked	167	189	150	83.0	98	64.0	122	16	49	33	33

table continued on the next page

Type of actuator	H1 (mm)	H2 (mm)	L1 (mm)	L2 (mm)	L3 (mm)	L4 (mm)	L5 (mm)	L6 (mm)	L7 (mm)	L8 (mm)	L9 (mm)
EA120 cUL marked	190	212	150	83.0	98	64.0	122	16	49	33	33
EA120 cUL marked	190	212	150	83.0	98	64.0	122	16	49	33	33
EA250 cUL marked	200	221	150	83.0	98	64.0	122	16	49	33	33
EA250 cUL marked	200	221	150	83.0	98	64.0	122	16	49	33	33

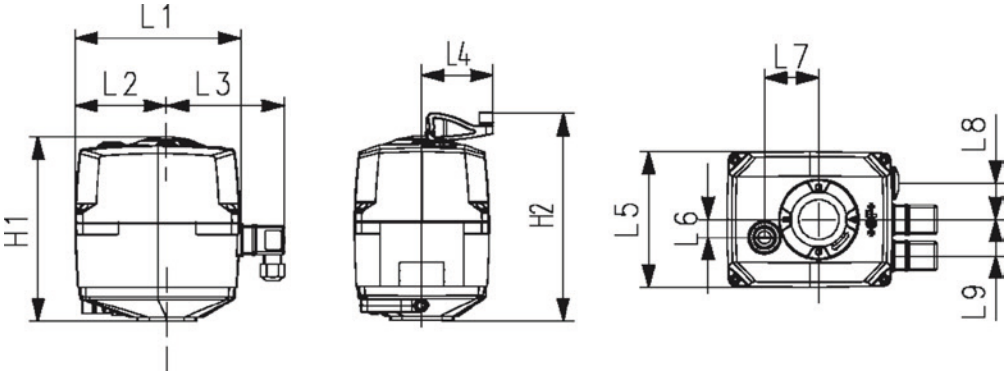

Modbus over RS485

Accessory for electric actuators type EA15/25/45/120/250

Model:

- All accessory can be retrofitted to installed actuators of the same generation
- Accessory works with 100-230V and 24V version

Material	Description	EA25-250 Code	EA15 Code	EA15-250 Code
Fail-safe return unit integrated	Moves actuator in pre-defined safe position upon power loss, integrated battery pack	**199 190 601**	**199 190 610**	
Fail-safe return unit external	Moves actuator in pre-defined safe position upon power loss, voltage supply implemented externally	**199 190 604**	**199 190 611**	
Positioner	Continuous actuator control. 4-20mA or 0-10 V Input and 4-20 mA Feedback	**199 190 603**		
Monitoring	Parameter monitoring. Generates alarm upon reaching its set limitations. Prevents water hammers or indicates maintenance need for valve	**199 190 602**		
Profibus DP	Enables the actuator to be connected to a Profibus DP-V0 network	**199 190 605**		
Diagnostic Tool	Enables to read from the actuator main board and check configurations			**199 190 600**
EA Demobox	Demo Box for electric actuators type EA15/25/45/120/250 as well as for types EA11/21/31/42 Suitable for 24V & 100-230V Control Open/ Close/ Middle; Display for feedback end positions and ready to operate			**199 190 607**
Modbus RTU via RS485	Modbus RTU Interface Module for EA 25 - 250 to integrate GF actuators into Modbus systems which are based on RS-485.	**199 190 617**		

Electric actuator type EA04

Type of actuator	Voltage	Code	Weight (kg)
10Nm	100-230V	**198 151 480**	0.900
10Nm	24V	**198 151 481**	0.900
20Nm	24-240V	**198 151 492**	1.500

Product Configurator

Create your own actuator

Electric Actuator
T01 EA 11 24V with Cable Plug
T02 EA 11 100-230V with Cable Plug
T07 EA 25 24V with Cable Plug
T08 EA 25 100-230V with Cable Plug
T09 EA 120 24V with Cable Plug
T10 EA 120 100-230V with Cable Plug
T11 EA 250 24V with Cable Plug
T12 EA 250 100-230V with Cable Plug

Angle (Open/ Close)
W45 45°
W90 90°
W180 180°

Middle Position
W17 No
W18 Yes

Colour Assignment Feedback
W20 Open = rot
W21 Open= grün

Position Feedback
W23 Open/ Close
W24 Open/ Close/ Middle
W25 Middle

Wiring Feedback
W26 NC
W28 NO

Heating Threshold
W29 5°
... [5°steps]
W37 45°

Failsafe Return uni
W39 Integrated (Battery powered)
W40 External (no Battery - 24V needed)

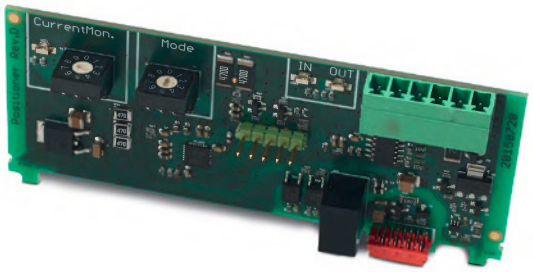

Accessory
W42 Positioner
W43 Monitoring
W44 Profibus

Setting Positioner
W46 BCD = 0
...
W55 BCD = 9

Setting Motor Current
W56 BCD = 0
...
W65 BCD = 9

Setting Cycle Time
W66 BCD = 0
...
W75 BCD = 9

Setting Cycle Time Monitoring
W76 BCD = 0
...
W85 BCD = 9

Setting Cycle Counter
W86 BCD = 0
...
W96 BCD = 9

T08	W90	W17	W20	W23	W26	W29	W39	W42	W46	W65	-	-	-	=

Pneumatic rotary actuators PA

Type PA11 / PA21

Pneumatic actuator type PA11/PA21
Fail safe to close (FC)

Inch (inch)	Type	DN-DN (mm)	Code	Weight (kg)
⅜ - 1	PA 11 FC	10 - 25	**198 150 127**	0.769
1 ¼ - 2	PA 21 FC	32 - 50	**198 150 130**	1.445

Pneumatic actuator type PA11/PA21
Fail safe to open (FO)

Inch (inch)	Type	DN-DN (mm)	Code	Weight (kg)
⅜ - 1	PA 11 FO	10 - 25	**198 150 128**	0.775
1 ¼ - 2	PA 21 FO	32 - 50	**198 150 131**	1.419

Pneumatic actuator type PA11/PA21
Double action (DA)

Inch (inch)	Type	DN-DN (mm)	Code	Weight (kg)
⅜ - 1	PA 11 DA	10 - 25	**198 150 129**	0.542
1 ¼ - 2	PA 21 DA	32 - 50	**198 150 132**	0.995

Pneumatic actuator type PA11/PA21
Fail safe to close (FC) with stroke limiter

Inch (inch)	Type	DN-DN (mm)	Code	Weight (kg)
⅜ - 1	PA 11 FC	10 - 25	**198 150 144**	0.854
1 ¼ - 2	PA 21 FC	32 - 50	**198 150 147**	1.609

Pneumatic actuator type PA11/PA21
Fail safe to open (FO) with stroke limiter

Inch (inch)	Type	DN-DN (mm)	Code	Weight (kg)
⅜ - 1	PA 11 FO	10 - 25	**198 150 145**	0.837
1 ¼ - 2	PA 21 FO	32 - 50	**198 150 148**	1.609

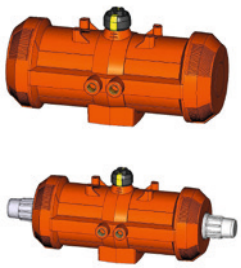

Pneumatic actuator type PA11/PA21
Double action (DA) with stroke limiter

Type	Inch (inch)	DN-DN (mm)	Code	Weight (kg)
PA 11 DA	⅜ - 1	10 - 25	**198 150 146**	0.647
PA 21 DA	1 ¼ - 2	32 - 50	**198 150 149**	1.185

Type PA30 / PA90

Pneumatic actuator type PA30 - PA90
Fail safe to close/fail safe to open (FC/FO)

* Only valid for butterfly valve type 240, 241, 242 and ball valve type 230 - 235

	Type	hard anodized Code	Weight (kg)	nickel plated Code	Weight (kg)	hard anodized with stroke limiter Code	Weight (kg)
	PA 30 FC/FO	**198 800 757**	2.022	**198 800 034**	2.400		
*	PA 30 FO	**198 811 025**	2.020				
	PA 35 FC/FO	**198 800 037**	2.673	**198 800 052**	2.400		
*	PA 35 FO	**198 811 026**	2.675				
	PA 40 FC/FO	**198 800 728**	3.602	**198 800 004**	3.598	**198 800 017**	3.598
*	PA 40 FO	**198 811 027**	3.623				
	PA 45 FC/FO	**198 800 039**	4.962	**198 800 054**	4.600		
*	PA45 FO	**198 811 028**	4.944				
	PA 50 FC/FO	**198 800 729**	6.921	**198 800 005**	6.921	**198 800 018**	6.921
*	PA50 FO	**198 811 029**	6.819				
	PA 55 FC/FO	**198 800 041**	9.354	**198 800 056**	9.400		
*	PA 55 FO	**198 811 030**	9.203				
	PA 60 FC/FO	**198 800 730**	11.371	**198 800 006**	12.895	**198 800 019**	12.895
	PA 65 FC/FO	**198 800 043**	15.900	**198 800 058**	15.900		
	PA 70 FC/FO	**198 800 731**	18.758	**198 800 007**	19.496	**198 800 020**	19.496
*	PA 70 FO	**198 811 198**	18.750				

	Type	epoxy coated Code	Weight (kg)
	PA 30 FC/FO	**198 811 194**	2.400
*	PA 30 FO		
	PA 35 FC/FO	**198 800 029**	2.400
*	PA 35 FO		
	PA 40 FC/FO	**198 800 025**	3.598
*	PA 40 FO		
	PA 45 FC/FO		
*	PA45 FO		
	PA 50 FC/FO	**198 800 026**	6.921
*	PA50 FO		
	PA 55 FC/FO	**198 811 190**	9.424
*	PA 55 FO		
	PA 60 FC/FO		
	PA 65 FC/FO		
	PA 70 FC/FO	**198 800 028**	19.496
*	PA 70 FO		

table continued on the next page

	Type		D1 (mm)	D2 (mm)	D3[M] (mm)	D4 (inch)	D5 (mm)	L (mm)	L2 (mm)	L3 (mm)	L4 (mm)	L5 (mm)	H (mm)
	PA 30 FC/FO	F04	42	30	M5x9		10	272	11	35	70	32	102
*	PA 30 FO	F04	42	30	M5x9	⅛	10	272	11	35	70	32	102
	PA 35 FC/FO	F05	50	35	M6x11		12	336	14	35	70	32	111
*	PA 35 FO	F05	50	35	M6x11	⅛	12	336	14	35	70	32	111
	PA 40 FC/FO	F05	50	35	M6x11		12	364	14	35	70	32	129
*	PA 40 FO	F05	50	35	M6x11	⅛	12	364	14	35	70	32	129
	PA 45 FC/FO	F07	70	55	M8x15	⅛	15	403	17	35	70	32	139
*	PA45 FO	F07	70	55	M8x15	⅛	15	403	17	35	70	32	139
	PA 50 FC/FO	F07	70	55	M8x15		15	418	17	35	70	32	149
*	PA50 FO	F07	70	55	M8x15	⅛	15	418	17	35	70	32	149
	PA 55 FC/FO	F10	102	70	M10x17		19	478	22	35	70	32	161
*	PA 55 FO	F10	102	70	M10x17	⅛	19	478	22	35	70	32	161
	PA 60 FC/FO	F10	102	70	M10x17	⅛	19	497	22	35	70	32	173
	PA 65 FC/FO	F12	125	85	M12x21	¼		617	27			32	191
	PA 70 FC/FO	F12	125	85	M12x21			652	27			32	196
*	PA 70 FO	F12	125	85	M12x21	¼		652	27			32	196

	Type	H1 (mm)	H2 (mm)	H3 (mm)	H4 (mm)	H5 (mm)	H6 (mm)	H7 (mm)	H8 (mm)
	PA 30 FC/FO	70	21	18	65	13	20	36	
*	PA 30 FO	70	21	18	65	13	20	36	
	PA 35 FC/FO	78	21	18	72	13	20	36	
*	PA 35 FO	78	21	18	72	13	20	36	
	PA 40 FC/FO	86	25	21	80	13	30	36	
*	PA 40 FO	86	25	21	80	13	30	36	
	PA 45 FC/FO	96	25	21	90	16	30	36	
*	PA45 FO	96	25	21	90	16	30	36	
	PA 50 FC/FO	106	25	26	100	17	30	36	
*	PA50 FO	106	25	26	100	17	30	36	
	PA 55 FC/FO	118	25	25	112	19	30	36	
*	PA 55 FO	118	25	25	112	19	30	36	
	PA 60 FC/FO	130	25	32	124	19	30	36	
	PA 65 FC/FO	148	24	34	137				22
	PA 70 FC/FO	153	24	38	145				24
*	PA 70 FO	153	24	38	145				24

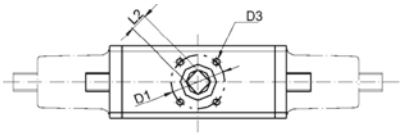

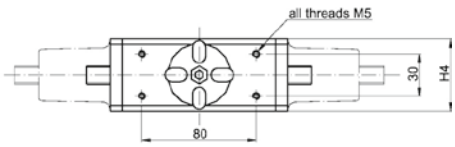

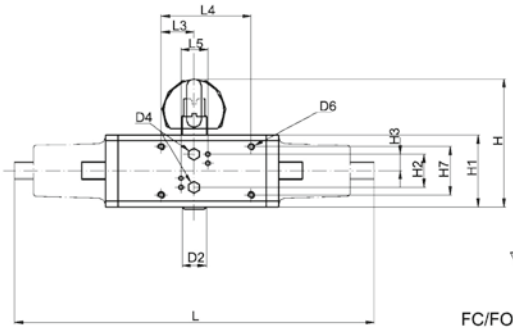

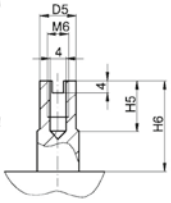

FC/FO: PA 30/35/40/45
PA 50/55/60

DA: PA 30/35/40/45
PA 50/55/60/65/70

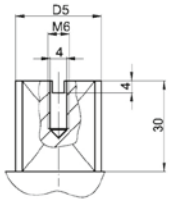

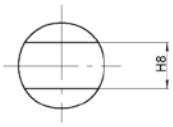

FC/FO: PA 65/70/75/80
DA: PA 75/80/85/90

Pneumatic actuator type PA30 - PA90
Double acting (DA)

Type	hard anodized Code	Weight (kg)
PA 30 DA	**198 800 737**	1.004
PA 35 DA	**198 800 758**	1.346
PA 40 DA	**198 800 759**	1.731
PA 45 DA	**198 800 040**	2.155
PA 50 DA	**198 800 733**	2.981
PA 55 DA	**198 800 042**	3.892
PA 60 DA	**198 800 734**	5.647
PA 65 DA	**198 800 044**	7.293
PA 70 DA	**198 800 735**	9.008
PA 75 DA	**198 800 046**	12.000
PA 80 DA	**198 800 048**	14.000
PA 85 DA	**198 800 050**	21.527
PA 90 DA	**198 800 051**	25.400

H7 (mm)	D5 (mm)	H6 (mm)	L4 (mm)	L3 (mm)	H5 (mm)	D3[M] (mm)		D1 (mm)	D2 (mm)	D4 (inch)	L1 (mm)	L2 (mm)	L5 (mm)	H (mm)	H1 (mm)
36	9	20	70	35	10	M5x9	F03	36	25	⅛	169	9		92	60
36	10	20	70	35	13	M5x9	F03	42	30	⅛	183	11		98	66
36	10	20	70	35	13	M5x9	F05	42	30	⅛	190	11		102	70
36	12	20	70	35	13	M6x11	F05	50	35	⅛	225	14		111	78
36	12	30	70	35	13	M6x11	F05	50	35	⅛	240	14		129	86
36	15	30	70	35	16	M8x15	F07	70	55	⅛	269	17		139	96
36	15	30	70	35	17	M8x15	F07	70	55	⅛	314	17		149	106
36	19	30	70	35	19	M10x17	F10	102	70	⅛	336	22		161	118
36	19	30	70	35	19	M10x17	F10	102	70	⅛	365	22		173	130
						M12x21	F12	125	85	¼	402	27	32	191	148
						M12x21	F12	125	85	¼	445	27	32	197	153
						M16x25	F14	140	100	¼	529	36	32	229	186
						M16x25	F14	140	100	¼	581	36	32	241	198

H2 (mm)	H3 (mm)	H4 (mm)	H8 (mm)
25	12	55	
25	13	60	
21	18	65	
21	18	72	
25	21	80	
25	21	90	
25	26	100	
25	25	112	
25	32	124	

table continued on the next page

H2 (mm)	H3 (mm)	H4 (mm)	H8 (mm)
24	34	137	22
24	38	145	24
24	43	166	27
24	44	180	32

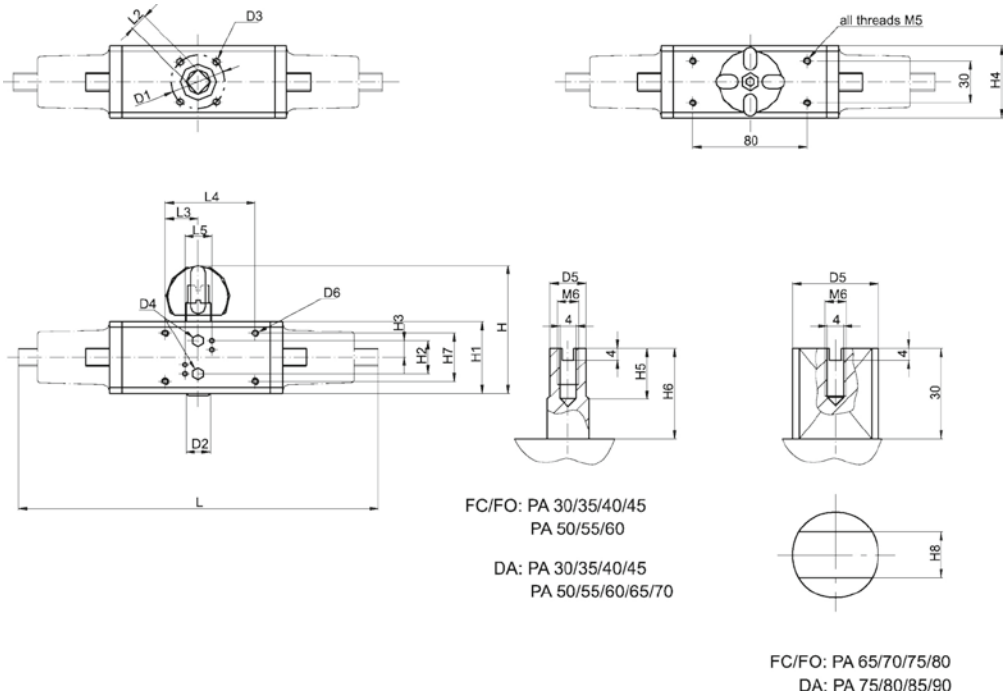

Tangit Rapid solvent free adhesive for PVC-U and PVC-C

Tangit Rapid cartridges kit

- 2-Component-Adhesive
- For PVC-U and PVC-C
- Tangit Rapid Kit consists of 6 cartridges, 12 mixers and 2 plastic brushes
- Tool needed: Tangit Rapid dispenser and mixers
- Check chemical resistance list (www.gfps.com)

Language	description	Code	Weight (kg)
DE, FR	50 ml	**799 302 005**	0.566
FR, NL	50 ml	**799 302 041**	0.566
DK, SE	50 ml	**799 302 042**	0.566
GB, IT	50 ml	**799 302 043**	0.566
FI, NO	50 ml	**799 302 044**	0.566
DE, ES, FR, GB, IT, NL, PT	400 ml	**799 302 007**	3.700
DK, FI, NO, SE	400 ml	**799 302 047**	3.700

Tangit Rapid dispenser

- For Tangit Rapid cartridges

d-d (mm)	description	Code	SP	Weight (kg)
16 - 140	50ml	**799 302 011**	1	0.185
110 - 400	400ml	**799 302 013**	1	1.100

Tangit Rapid plastic brush

Dimension	Code	Weight (kg)
3/8"	**799 302 021**	0.006
1"	**799 302 022**	0.008
2"	**799 302 023**	0.010

Tangit Rapid mixer set

- For Tangit Rapid cartridges
- Bag with 30 pieces for 50ml and 15 pieces for 400ml

description	Code	SP	Weight (kg)
50ml	**799 302 032**	1	0.160
400ml	**799 302 033**	1	0.190

Tangit Ruler with marking for insertion depth

d-d (mm)	Code	SP	Weight (kg)
16 - 400	**799 302 036**	50	0.044

Tangit Rapid pneumatic dispenser

- For Tangit Rapid cartridges
- Air Supply 8 bar (110/116 PSI), Air Consumption max. 40 litres/min

d-d (mm)	Code	SP	Weight (kg)	description
16 - 140	**799 302 014**	1	0.730	50ml
110 - 400	**799 302 015**	1	1.920	400ml

Tangit Rapid battery operated dispenser

- For Tangit Rapid cartridges
- Speed 4.5 mm/s, Battery 18V 2 Ah Li-Ion, including toolbox, one battery, charger 240V

d-d (mm)	Code	SP	Weight (kg)	description
110 - 400	**799 302 016**	1	7.841	400ml

Solvent cement

Tangit PVC-C solvent cement

- 0,65 kg can (net)

Code	SP	Weight (kg)
799 298 027	6	0.700

GF Dytex special solvent cement

- For PVC-U, PVC-C

Model:

- Special solvent cement for sulphuric acid >93% - 96%
- Not gap filling
- 0,65 kg can (net)

Code	Weight (kg)
799 298 116	0.769

Tangit DTX special solvent cement

- Special solvent cement for critical media (see online tool ‚chemical resistance')
- For PVC-U, PVC-C
- Max. PN10/d140
- Use cleaner for PVC-U/C, ABS
- Tin à 0.500 kg

Language	Code	SP	Weight (kg)
DE, FR, GB, NL	**799 298 031**	6	0.586
DK, FI, NO, SE	**200 119 366**		0.500
NL	**200 155 054**		0.586

Tangit PVC-U/PVC-C/ABS cleaner/primer

Model:

- For PVC-U, PVC-C, ABS
- 1 litre tin

Code	SP	Weight (kg)
799 298 010	12	0.900

GF Dytex special cleaner/dissolvant

- For PVC-U, PVC-C

Model:

- To be used with GF Dytex special solvent cement
- 0,5 l can (net)

Code	Weight (kg)
799 298 117	0.718

Cap for cement

- Cap prevents the evaporation of the solvent whilst using the Tangit cement

Code	SP	Weight (kg)
799 298 028	500	0.030

Brushes and Tools

Round brush

d-d (mm)		Code	SP	Weight (kg)	Closest inch (inch)
6 - 10	4 mm (for Fittings 6-10mm)	**799 299 001**	12	0.004	⅛
12 - 32	8 mm (for Fittings 12-32mm)	**799 299 002**	12	0.006	¼ - 1

Flat brush

d-d (mm)		Code	SP	Weight (kg)	Closest inch (inch)
40 - 63	25x3 mm (for Fittings 40-63mm)	**799 299 003**	12	0.015	1 ¼ - 2
75 - 225	50x5 mm (for Fittings 75-225mm)	**799 299 004**	12	0.035	2 ½ - 8
250 - 400	75x6 mm (for Fittings 250-400mm)	**799 299 005**	12	0.053	9 - 16

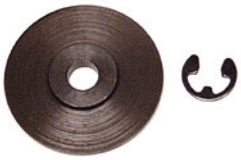

Spare cutting wheel for discontinuing pipe cutter 790109001-03

For plastic pipe cutter

d-d (mm)	Article	Code	SP	Weight (kg)
10 - 63	SR 63 max. s=7,2 mm	**790 109 011**	1	0.004
50 - 110	SR 110/160 max. s=12,7 mm	**790 109 012**	1	0.015
110 - 160	SR 160 max. s=19,0 mm	**790 109 013**	1	0.023

Alignment Tool

- To align and position pipes in the dimension range d 110 - 400 mm. The pipes are clamped in the vice, the axial movement takes placed by a chain drive. The chain is totated by the ratched (square 19 mm).

Article	Code	Weight (kg)
Alignment Tool	**790 109 108**	15.000
Ratch	**790 109 107**	1.220

Chamfering tool

d-d (mm)	Size (mm)	Code	SP	Weight (kg)	Closest inch (inch)
16 - 75	1	**799 495 145**	0	0.720	⅜ - 2 ½
32 - 200	2	**799 495 146**	0	0.992	1 - 8

Marker

Type	Code	Weight (kg)
silver	**799 350 364**	0.010

Timer with 2 stop times

Code	SP	Weight (kg)
790 114 028	1	0.088

Spare parts

Spare parts ball valves	221
Spare parts diaphragm valves	227
Spare parts butterfly valves	234
Spare parts process control valves	237
Spare parts cone check valves	242
Spare parts and accessories	245

Spare parts ball valves

Spare parts ball valve type 546

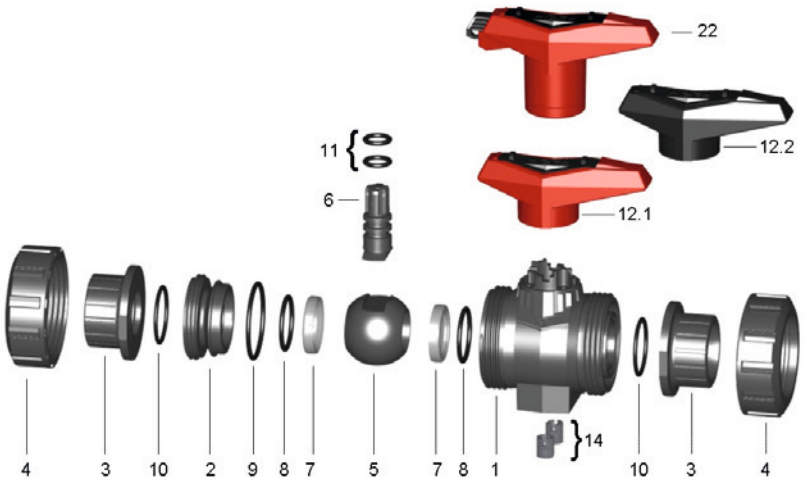

Central part

Model:

- Every connecting pieces and union nuts are listed on product range industry valves
- Ball seals standard in PTFE
- Central part consisting of: body (1), union bush (2), ball (5), stem (6), ball-, backing-, body-, face- and stem seal (7-11), standard lever (12) and threaded inserts stainless steel (14)

d (mm)	Size (inch)	DN (mm)	PVC-C EPDM Code	PVC-C FKM Code
16	⅜	10	**163 481 251**	**163 481 263**
20	½	15	**163 481 251**	**163 481 263**
25	¾	20	**163 481 252**	**163 481 264**
32	1	25	**163 481 253**	**163 481 265**
40	1 ¼	32	**163 481 254**	**163 481 266**
50	1 ½	40	**163 481 255**	**163 481 267**
63	2	50	**163 481 256**	**163 481 268**
75	2 ½	65	**163 481 257**	**163 481 269**
90	3	80	**163 481 258**	**163 481 270**
110	4	100	**163 481 259**	**163 481 271**

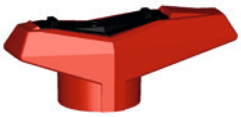

DN10/15 - 50

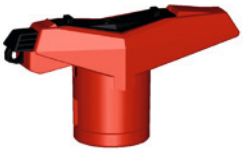

DN10/15 - 50

Lever 546

d (mm)	Size (inch)	DN (mm)	Standard lever red Code	Standard lever black Code	Multifunctional lever Code
16	⅜	10	**167 484 088**	**167 484 076**	**167 484 100**
20	½	15	**167 484 088**	**167 484 076**	**167 484 100**
25	¾	20	**167 484 089**	**167 484 077**	**167 484 101**
32	1	25	**167 484 090**	**167 484 078**	**167 484 102**
40	1 ¼	32	**167 484 091**	**167 484 079**	**167 484 103**
50	1 ½	40	**167 484 092**	**167 484 080**	**167 484 104**
63	2	50	**167 484 093**	**167 484 081**	**167 484 105**
75	2 ½	65	**167 484 094**	**167 484 082**	**161 486 689**
90	3	80	**167 484 095**	**167 484 083**	**161 486 690**
110	4	100	**167 484 096**	**167 484 084**	**161 486 691**

Face seal

Model:

- Face seal no. 10

d (mm)	Size (inch)	DN (mm)	EPDM Code	FKM Code
16	⅜	10	**748 410 059**	**749 410 059**
20	½	15	**748 410 059**	**749 410 059**
25	¾	20	**748 410 106**	**749 410 106**
32	1	25	**748 410 151**	**749 410 151**
40	1 ¼	32	**748 410 062**	**749 410 062**
50	1 ½	40	**748 410 003**	**749 410 003**
63	2	50	**748 410 231**	**749 410 231**
75	2 ½	65	**748 410 119**	**749 410 119**
90	3	80	**748 410 023**	**749 410 023**
110	4	100	**748 410 254**	**749 410 254**

Seal set for ball valve 546 (Pro)

Model:

- Seal set consisting of: backing-, body-, face- and stem seal (8-11)

d (mm)	Size (inch)	DN (mm)	DN (mm)	EPDM Code	FKM Code	KALREZ Code
16 - 20	½	15	10 - 15	**161 486 400**	**161 486 410**	**161 488 280**
25	¾	20	20	**161 486 401**	**161 486 411**	**161 488 281**
32	1	25	25	**161 486 402**	**161 486 412**	**161 488 282**
40	1 ¼	32	32	**161 486 403**	**161 486 413**	**161 488 283**
50	1 ½	40	40	**161 486 404**	**161 486 414**	**161 488 284**
63	2	50	50	**161 486 405**	**161 486 415**	**161 488 285**
75	2 ½	65	65	**161 486 406**	**161 486 416**	
90	3	80	80	**161 486 407**	**161 486 417**	
110	4	100	100	**161 486 408**	**161 486 418**	

Ball set

Model:

- Ball seals standard in PTFE
- Ball set consisting of: ball (5), stem (6), ball-, backing-, body- and stem seal (7-9,11)

d (mm)	Size (inch)	DN (mm)	PVC-C EPDM Code	PVC-C FKM Code
16	⅜	10	**163 481 375**	**163 481 385**
20	½	15	**163 481 375**	**163 481 385**
25	¾	20	**163 481 376**	**163 481 386**
32	1	25	**163 481 377**	**163 481 387**
40	1 ¼	32	**163 481 378**	**163 481 388**
50	1 ½	40	**163 481 379**	**163 481 389**
63	2	50	**163 481 380**	**163 481 390**
75	2 ½	65	**163 481 381**	**163 481 391**
90	3	80	**163 481 382**	**163 481 392**
110	4	100	**163 481 383**	**163 481 393**

Spare parts ball valve type 543 horizontal

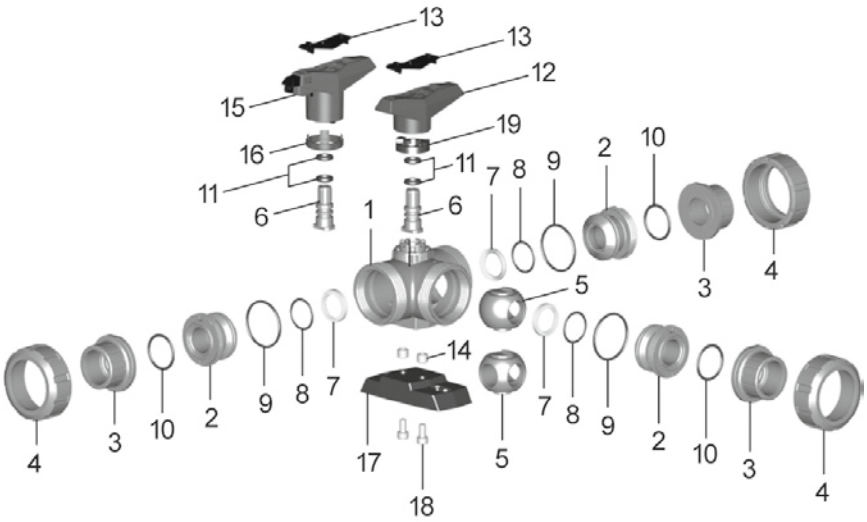

Central part for Ball valve type 543 Pro
L-port
Horizontal

Model:

- Ball seals standard in PTFE
- Central part consisting of: body, union bush, ball, stem, standard lever, stainless steel threaded inserts and seal for: ball, backing, body, face and stem
- Every connecting pieces and union nuts are listed on product range industry valves

d (mm)	Size (inch)	DN (mm)	PVC-C EPDM Code	PVC-C FKM Code
16	⅜	10	**163 481 902**	**163 481 912**
20	½	15	**163 481 902**	**163 481 912**
25	¾	20	**163 481 903**	**163 481 913**
32	1	25	**163 481 904**	**163 481 914**
40	1 ¼	32	**163 481 905**	**163 481 915**
50	1 ½	40	**163 481 906**	**163 481 916**
63	2	50	**163 481 907**	**163 481 917**

Central part for Ball valve type 543 Pro
T-port
Horizontal

Model:

- Ball seals standard in PTFE
- Central part consisting of: body, union bush, ball, stem, standard lever, stainless steel threaded inserts and seal for: ball, backing, body, face and stem

d (mm)	Size (inch)	DN (mm)	PVC-C EPDM Code	PVC-C FKM Code
16	⅜	10	**163 481 922**	**163 481 932**
20	½	15	**163 481 922**	**163 481 932**
25	¾	20	**163 481 923**	**163 481 933**
32	1	25	**163 481 924**	**163 481 934**
40	1 ¼	32	**163 481 925**	**163 481 935**
50	1 ½	40	**163 481 926**	**163 481 936**
63	2	50	**163 481 927**	**163 481 937**

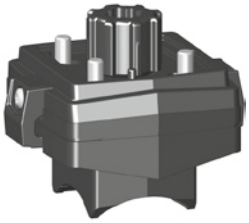

Assembly kit

Model:

- Intermediate element for ball valve type 543 horizontal and electric or pneumatic actuators EA21; PA11/21
- Including screws and position indicator for actuators

d (mm)	Inch (inch)	DN (mm)	Code
16 - 20	⅜ - ½	10 - 15	**167 484 941**
25 - 32	¾ - 1	20 - 25	**167 484 942**
40 - 50	1 ¼ - 1 ½	32 - 40	**167 484 943**
63	2	50	**167 484 944**

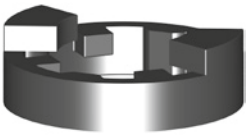

Turn limiter 90°

d (mm)	Size (inch)	DN (mm)	Code
16	⅜	10	**167 482 479**
20	½	15	**167 482 479**
25	¾	20	**167 482 480**
32	1	25	**167 482 480**
40	1 ¼	32	**167 482 481**
50	1 ½	40	**167 482 481**
63	2	50	**167 482 482**

Face seal

Model:

- Face seal no. 10

d (mm)	Size (inch)	DN (mm)	EPDM Code	FKM Code
16	⅜	10	**748 410 059**	**749 410 059**
20	½	15	**748 410 059**	**749 410 059**
25	¾	20	**748 410 106**	**749 410 106**
32	1	25	**748 410 151**	**749 410 151**
40	1 ¼	32	**748 410 062**	**749 410 062**
50	1 ½	40	**748 410 003**	**749 410 003**
63	2	50	**748 410 231**	**749 410 231**
75	2 ½	65	**748 410 119**	**749 410 119**
90	3	80	**748 410 023**	**749 410 023**
110	4	100	**748 410 254**	**749 410 254**

Lever

d (mm)	Size (inch)	DN (mm)
16	⅜	10
20	½	15
25	¾	20
32	1	25
40	1 ¼	32
50	1 ½	40
63	2	50

table continued on the next page

d (mm)	Standard lever L-port red Code	Standard lever L-port black Code	Standard lever T-port red Code	Standard lever T-port black Code	Multifunctional-lever L-port red Code
16	**167 484 488**	**167 484 376**	**167 484 588**	**167 484 576**	**167 484 442**
20	**167 484 488**	**167 484 376**	**167 484 588**	**167 484 576**	**167 484 442**
25	**167 484 489**	**167 484 377**	**167 484 589**	**167 484 577**	**167 484 443**
32	**167 484 490**	**167 484 378**	**167 484 590**	**167 484 578**	**167 484 444**
40	**167 484 491**	**167 484 379**	**167 484 591**	**167 484 579**	**167 484 445**
50	**167 484 492**	**167 484 380**	**167 484 592**	**167 484 580**	**167 484 446**
63	**167 484 493**	**167 484 381**	**167 484 593**	**167 484 581**	**167 484 447**

d (mm)	Multifunctional-lever T-port red Code
16	**167 484 542**
20	**167 484 542**
25	**167 484 543**
32	**167 484 544**
40	**167 484 545**
50	**167 484 546**
63	**167 484 547**

Ball set L-port

Model:

- Ball set consisting of: lever (12), ball (5), stem (6), ball-, backing-, body- and stem seal (7-9,11)
- Ball seals standard in PTFE

d (mm)	Size (inch)	DN (mm)	PVC-C EPDM Code	PVC-C FKM Code
16	⅜	10	**163 481 982**	**163 481 992**
20	½	15	**163 481 982**	**163 481 992**
25	¾	20	**163 481 983**	**163 481 993**
32	1	25	**163 481 984**	**163 481 994**
40	1 ¼	32	**163 481 985**	**163 481 995**
50	1 ½	40	**163 481 986**	**163 481 996**
63	2	50	**163 481 987**	**163 481 997**

Spare parts diaphragm valves

Mounting Tool type 604/605

Model:

- Hook wrench for easy opening & maintenance

Code	Weight (kg)
700 278 354	0.41

Spare parts for valve body type 514

O-ring

d (mm)	Size (inch)	DN (mm)	EPDM Code	FKM Code
20	½	15	**748 410 006**	**749 410 006**
25	¾	20	**748 410 007**	**749 410 007**
32	1	25	**748 410 008**	**749 410 008**
40	1 ¼	32	**748 410 009**	**749 410 009**
50	1 ½	40	**748 410 010**	**749 410 010**
63	2	50	**748 410 011**	**749 410 011**

Union end PVC-U Rc
for diaphragm valves type 514/DIASTAR, pressure regulating valves type 582/586 and variable
area flow meters type 123/335/350 (6)

DN (mm)	d (mm)	Size (inch)	PVC-U Rc Code
15	20	½	**721 605 606**
20	25	¾	**721 605 607**
25	32	1	**721 605 608**
32	40	1 ¼	**721 605 609**
40	50	1 ½	**721 605 610**
50	63	2	**721 605 611**

Valve body with true union

Model:

- Without connection parts

d (mm)	Size (inch)	DN (mm)	PVC-C Code	ABS Code
20	½	15	**163 482 052**	
25	¾	20	**163 482 053**	**169 481 323**
32	1	25	**163 482 054**	
40	1 ¼	32	**163 482 055**	
50	1 ½	40	**163 482 056**	**169 481 326**
63	2	50	**163 482 057**	**169 481 327**

Spare parts for valve body type 515

Valve body with spigot ends

d (mm)	DN (mm)	Size (inch)	PVC-C solvent cement spigot Code
20	15	½	**163 482 062**
25	20	¾	**163 482 063**
32	25	1	**163 482 064**
40	32	1 ¼	**163 482 065**
50	40	1 ½	**163 482 066**
63	50	2	**163 482 067**

Spare parts for valve body type 517
Flat gasket

d (mm)	Size (inch)	DN (mm)	EPDM Code	FKM Code
20	½	15	**748 400 006**	**749 400 006**
25	¾	20	**748 400 007**	**749 400 007**
32	1	25	**748 400 008**	**749 400 008**
40	1 ¼	32	**748 400 009**	**749 400 009**
50	1 ½	40	**748 400 010**	**749 400 010**
63	2	50	**748 400 011**	**749 400 011**

Spare parts diaphragm
For 5 series

Model:

- For type 514, 515, 517, 519 and Diastar

d (mm)	Size (inch)	DN (mm)	NBR Code	EPDM Code	FKM Code	PTFE/EPDM Code	PTFE/FKM Code
20	½	15	**745 500 012**	**748 500 012**	**749 500 012**	**747 502 012**	**747 503 012**
25	¾	20	**745 500 013**	**748 500 013**	**749 500 013**	**747 502 013**	**747 503 013**
32	1	25	**745 500 014**	**748 500 014**	**749 500 014**	**747 502 014**	**747 503 014**
40	1 ¼	32	**745 500 015**	**748 500 015**	**749 500 015**	**747 502 015**	**747 503 015**
50	1 ½	40	**745 500 016**	**748 500 016**	**749 500 016**	**747 502 016**	**747 503 016**
63	2	50	**745 500 017**	**748 500 017**	**749 500 017**	**747 502 017**	**747 503 017**

Spare parts for automatic valves
Diastar Six/Ten/Sixteen

Actuators

d (mm)	Size (inch)	DN (mm)
20	½	15
25	¾	20
32	1	25
40	1 ¼	32
50	1 ½	40
63	2	50

d (mm)	DIASTAR Six FC Code	DIASTAR Ten FC Code	Diastar Ten + FC Code	Diastar Sixteen FC Code	Diastar Ten FO Code	Diastar Ten DA Code
20	198 151 762	198 151 772	198 153 062	198 151 782	198 151 792	198 151 802
25	198 151 763	198 151 773	198 153 063	198 151 783	198 151 793	198 151 803
32	198 151 764	198 151 774	198 153 064	198 151 784	198 151 794	198 151 804
40	198 151 765	198 151 775	198 153 065	198 151 785	198 151 795	198 151 805
50	198 151 766	198 151 776	198 153 066	198 151 786	198 151 796	198 151 806
63	198 151 767	198 151 777	198 153 067	198 151 787	198 151 797	198 151 807

Indicator cap

Size (mm)	Code
1-2	198 806 773
3-5	198 806 774

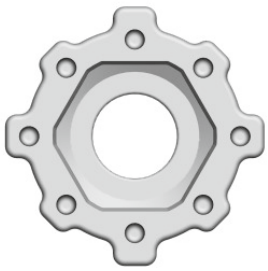

Compressor set

Model:

- Incl. diaphragm holder

d (mm)	Inch (inch)	DN (mm)	Code
20	1/2	15	**198 000 872**
25	3/4	20	**198 000 873**
32	1	25	**198 000 874**
40	1 1/4	32	**198 000 875**
50	1 1/2	40	**198 000 876**
63	2	50	**198 000 877**

Seal set for DIASTAR Ten

Model:

- Spindle seal and piston seal

DN (mm)	Diastar Ten Code
15	**198 000 881**
20/25	**198 000 882**
32	**198 000 883**
40/50	**198 000 884**

Spare parts for hand-operated valves
Type 514/515/517/519

Bonnet complete

Model:

- Incl. compressor
- Diaphragm is not included

d (mm)	Size (inch)	DN (mm)	Standard configuration PN10 Code	For pressure tight housing PN10 Code	Standard configuration PN16 Code	For pressure tight housing PN16 Code
20	½	15	**198 151 742**	**198 151 752**	**198 151 842**	**198 151 852**
25	¾	20	**198 151 743**	**198 151 753**	**198 151 843**	**198 151 853**
32	1	25	**198 151 744**	**198 151 754**	**198 151 844**	**198 151 854**
40	1 ¼	32	**198 151 745**	**198 151 755**	**198 151 845**	**198 151 855**
50	1 ½	40	**198 151 746**	**198 151 756**	**198 151 846**	**198 151 856**
63	2	50	**198 151 747**	**198 151 757**	**198 151 847**	**198 151 857**

Spindle assembly

Model:

- Incl. compressor
- Position indicator is not included

DN-DN (mm)	Code
15 - 20	**198 204 327**
25 - 32	**198 204 328**
40 - 50	**198 204 329**

Position indicator

d (mm)	Size (inch)	DN (mm)	Code
20	½	15	**167 484 992**
25	¾	20	**167 484 993**
32	1	25	**167 484 994**
40	1 ¼	32	**167 484 995**
50	1 ½	40	**167 484 996**
63	2	50	**167 484 997**

Hand wheel

Model:

- Without position indicator

DN (mm)	Code
15 - 20	**198 204 162**
25 - 32	**198 204 164**
40 - 50	**198 104 166**

Seal set

Model:

- For manual valve - pressure tight housing
- Incl. position indicator

d (mm)	Size (inch)	DN (mm)	EPDM Code
20	½	15	**198 000 892**
25	¾	20	**198 000 893**
32	1	25	**198 000 894**
40	1 ¼	32	**198 000 895**
50	1 ½	40	**198 000 896**
63	2	50	**198 000 897**

Special wrench for DV

d (mm)	DN (mm)	Code
20	15	**198 154 012**
25	20	**198 154 013**
32	25	**198 154 014**
40	32	**198 154 015**
50	40	**198 154 016**
63	50	**198 154 017**

Spare parts butterfly valves

Spare parts butterfly valve type 567/578

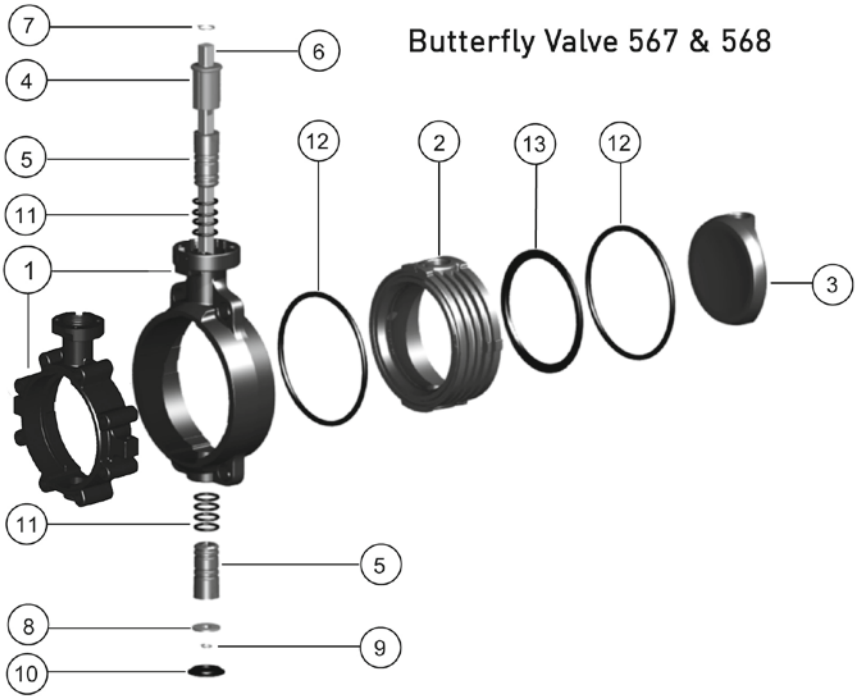

Inner body for Butterfly Valve Type 567 and 578

Model:

- Inner body consisting of: inner body (2) and profile seal (13)

d (mm)	Size (inch)	DN (mm)	PVC-C EPDM Code	PVC-C FKM Code
63	2	50	**163 481 591**	**163 481 603**
75	2 ½	65	**163 481 592**	**163 481 604**
90	3	80	**163 481 593**	**163 481 605**
110	4	100	**163 481 594**	**163 481 606**
140	5	125	**163 481 595**	**163 481 607**
160	6	150	**163 481 596**	**163 481 608**
225	8	200	**163 481 597**	**163 481 609**

Disc for Butterfly Valve Type 567 and 578

d (mm)	Size (inch)	DN (mm)	PVC-C Code
63	2	50	**163 481 451**
75	2 ½	65	**163 481 452**
90	3	80	**163 481 453**
110	4	100	**163 481 454**
140	5	125	**163 481 455**
160	6	150	**163 481 456**
225	8	200	**163 481 457**

Bearing bush for Butterfly Valve Type 567 and 578

Model:

- Included in delivery 2 pcs.
- With o-ring
- Bearing bushes in PP-H are used in PP-H and ABS butterfly valves

d (mm)	Size (inch)	DN (mm)	PVC-C EPDM Code	PVC-C FKM Code
63, 75, 90	2, 2½, 3	50, 65, 80	**163 481 576**	**163 481 582**
110, 140	4, 5	100, 125	**163 481 577**	**163 481 583**
160, 225	6, 8	150, 200	**163 481 578**	**163 481 584**

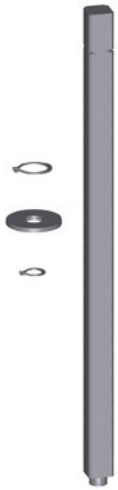

Shaft set for Butterfly Valve Type 567 and 578

Model:

- Shaft set consisting of: shaft chrom steel 1.4404 (SUS316L) (6), retention ring (7, 9) and washer (8)

d (mm)	Size (inch)	DN (mm)	Code
63	2	50	**161 486 899**
75	2 ½	65	**161 486 900**
90	3	80	**161 486 901**
110	4	100	**161 486 902**
140	5	125	**161 486 903**
160	6	150	**161 486 904**
225	8	200	**161 486 905**
280	10	250	**161 486 906**
315	12	300	**161 486 907**
355	14	350	**161 486 908**
400	16	400	**161 486 909**
450	18	450	**161 486 926**
500	20	500	**161 486 927**
630	24	600	**161 486 928**

Hand lever for Butterfly Valve Type 567 and 578

d (mm)	Size (inch)	DN (mm)	with index plate Code	with fine adjustment Code
63	2	50	**161 486 690**	**161 486 325**
75	2 ½	65	**161 486 690**	**161 486 325**
90	3	80	**161 486 690**	**161 486 325**
110	4	100	**161 486 691**	**161 486 326**
140	5	125	**161 486 691**	**161 486 326**
160	6	150	**161 486 694**	**161 486 327**
225	8	200	**161 486 695**	**161 486 328**
280	10	250	**161 486 697**	
315	12	300	**161 486 697**	

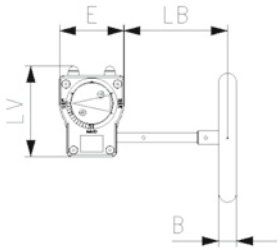

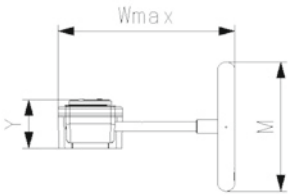

Reduction gear with handwheel for Butterfly Valve Type 565, 567 and 578

- For valve actuation via a reduction gear with hand wheel. Suitable for all GF butterfly valves.
- Intermediate elements are required.
- This version is not recommended to use in outside or corrosive environment

DN (mm)	Code	Wmax (mm)	LV (mm)	Y (mm)	M (mm)	B (mm)	E (mm)	LB (mm)
50 - 200	**161 483 471**	221.0	112.3	61.2	160.0	23.0	80.0	129.5
250 - 300	**161 483 472**	246.3	130.0	68.4	200.0	24.6	100.0	134.0

Profile seal (13) DN350-600 for Butterfly Valve Type 567

d (mm)	Size (inch)	DN (mm)	EPDM Code	FKM Code
355	14	350	**748 440 018**	**749 440 028**
400	16	400	**748 440 019**	**749 440 029**
450	18	450	**748 440 020**	**749 440 030**
500	20	500	**748 440 021**	**749 440 031**
630	24	600	**748 440 022**	**749 440 032**

Intermediate element for Butterfly Valve Type 567 and 578 (reduction gear)

d (mm)	DN (mm)	Code
63	50	**198 000 621**
75	65	**198 000 621**
90	80	**198 000 621**
110	100	**198 000 622**
140	125	**198 000 622**
140	150	**198 000 600**
140	150	**198 000 600**
280	250	**198 000 732**
280	250	**198 000 732**

Spare parts process control valves

Pressure regulating valve type 582/586

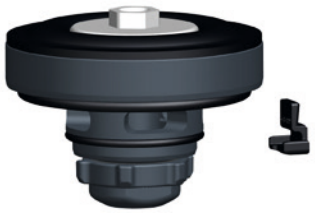

Cartridge type 582

DN (mm)	PVC-C EPDM Code	PVC-C FKM Code
10-15	**163 489 131**	**163 489 231**
20-25	**163 489 133**	**163 489 233**
32-50	**163 489 136**	**163 489 236**

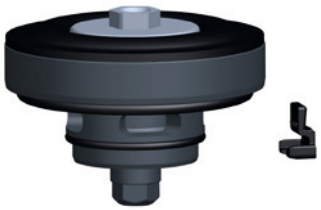

Cartridge type 586

DN (mm)	PVC-C EPDM Code	PVC-C FKM Code	PVDF-HP FKM Code
10-15	**163 489 161**	**163 489 261**	**180 489 161**
20-25	**163 489 163**	**163 489 263**	**180 489 163**
32-50	**163 489 166**	**163 489 266**	**180 489 166**

Cover cap

DN (mm)	Type	Code
10-15	582/586	**198 806 391**
20-25	582/586	**198 806 393**
32-50	582/586	**198 806 396**

SYGEF Standard Manometer Adapter
For pressure regulating valves type 582/586

Model:

- Material: PVDF
- For media separation from pressure gauge to process medium
- PTFE/EPDM Manometer diaphragm
- *EPDM and FKM O-Ring included in Set

DN (mm)	EPDM/FKM Code
10-50	**198 806 650**

Manometer
For pressure regulating valves type 582/586

Model:

- Display with double scale: 0-4 bar / 0-58 psi, size: ø 40mm
- Display with double scale: 0-10bar / 0-150psi, size: ø 40mm
- Connection G 1/4 center back mount

DN (mm)	Material	EPDM/FKM 0-10bar Code	EPDM/FKM 0-4bar Code
10-50	Brass	**198 806 651**	**198 806 963**
10-50	Stainless Steel	**198 806 652**	**198 806 962**

Manometer plug
For pressure regulating valves type 582/586

- For maintenance

DN (mm)	Code
10-50	**198 806 653**

Hook wrench

DN (mm)	Type	Code
10-15	582/586	**198 806 451**
20-25	582/586	**198 806 452**
32-50	582/586	**198 806 453**

Spare parts ventilating- and bleed valve type 591/595

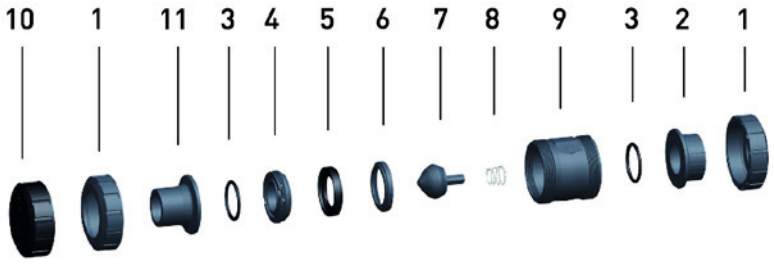

Central part with spring for Bleeding valve type 595

Model:

- Central body consisting of: housing (9), union bush (4), support ring (6), floater (7), spring Nimonic 90 Halar coated (8), profile seal ring (5) and face seal (3)

d (mm)	Size (inch)	DN (mm)	PVC-C EPDM Code	PVC-C FKM Code
16	⅜	10	**163 485 281**	**163 485 291**
20	½	15	**163 485 281**	**163 485 291**
25	¾	20	**163 485 282**	**163 485 292**
32	1	25	**163 485 283**	**163 485 293**
40	1 ¼	32	**163 485 284**	**163 485 294**
50	1 ½	40	**163 485 285**	**163 485 295**
63	2	50	**163 485 286**	**163 485 296**
75	2 ½	65	**163 485 287**	**163 485 297**
90	3	80	**163 485 288**	**163 485 298**
110	4	100	**163 485 289**	**163 485 299**

Central part without spring for Ventilating and Bleed valve 591

Model:

- Central body consisting of: housing (9), union bush (4), support ring (6), floater PP-H/PVDF (7), profile seal ring (5) and face seal (3)

d (mm)	Size (inch)	DN (mm)	PVC-C EPDM Code	PVC-C FKM Code
16	⅜	10	**163 485 261**	**163 485 271**
20	½	15	**163 485 261**	**163 485 271**
25	¾	20	**163 485 262**	**163 485 272**
32	1	25	**163 485 263**	**163 485 273**
40	1 ¼	32	**163 485 264**	**163 485 274**
50	1 ½	40	**163 485 265**	**163 485 275**
63	2	50	**163 485 266**	**163 485 276**
75	2 ½	65	**163 485 267**	**163 485 277**
90	3	80	**163 485 268**	**163 485 278**
110	4	100	**163 485 269**	**163 485 279**

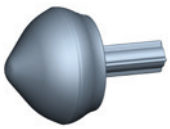

Cone (7)

Model:

- For type 595

d (mm)	Size (inch)	DN (mm)	PVC-U Code	PVC-C Code
16	⅜	10		**163 482 151**
25	¾	20		**163 482 152**
32	1	25	**161 491 153**	**163 482 153**
40	1 ¼	32		**163 482 154**
50	1 ½	40		**163 482 155**
63	2	50		**163 482 156**
75	2 ½	65		**163 482 157**
90	3	80		**163 482 158**
110	4	100		**163 482 159**

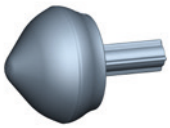

Floater (7)

Model:

- For type 591

d (mm)	Size (inch)	DN (mm)	PP-H Code	PVDF Code
16	⅜	10	**167 485 151**	**175 484 161**
20	½	15	**167 485 151**	**175 484 161**
25	¾	20	**167 485 152**	**175 484 162**
32	1	25	**167 485 153**	**175 484 163**
40	1 ¼	32	**167 485 154**	**175 484 164**
50	1 ½	40	**167 485 155**	**175 484 165**
63	2	50	**167 485 156**	**175 484 166**
75	2 ½	65	**167 485 157**	**175 484 167**
90	3	80	**167 485 158**	**175 484 168**
110	4	100	**167 485 159**	**175 484 169**

Protective cap (10)

Model:

- Protects the piping system from dirt particles out of the ambient airCan also be used as tool for opening and closing the valve union bushing

d (mm)	Size (inch)	DN (mm)	PP-GF Code
16	⅜	10	**167 485 361**
20	½	15	**167 485 361**
25	¾	20	**167 485 362**
32	1	25	**167 485 363**
40	1 ¼	32	**167 485 364**
50	1 ½	40	**167 485 365**
63	2	50	**167 485 366**
75	2 ½	65	**167 485 367**
90	3	80	**167 485 368**
110	4	100	**167 485 369**

Seal set

Model:

- Seal set consisting of: profile seal ring (5) and face seal (3)

d (mm)	Size (inch)	DN (mm)	EPDM Code	FKM Code
16	⅜	10	**161 485 241**	**161 485 251**
20	½	15	**161 485 241**	**161 485 251**
25	¾	20	**161 485 242**	**161 485 252**
32	1	25	**161 485 243**	**161 485 253**
40	1 ¼	32	**161 485 244**	**161 485 254**
50	1 ½	40	**161 485 245**	**161 485 255**
63	2	50	**161 485 246**	**161 485 256**
75	2 ½	65	**161 485 247**	**161 485 257**
90	3	80	**161 485 248**	**161 485 258**
110	4	100	**161 485 249**	**161 485 259**

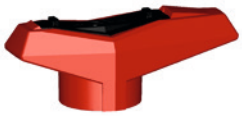

DN10/15 - 50

Handle for dismantling

d (mm)	Size (inch)	DN (mm)	red Code	black Code
16	⅜	10	**167 484 088**	**167 484 076**
20	½	15	**167 484 088**	**167 484 076**
25	¾	20	**167 484 089**	**167 484 077**
32	1	25	**167 484 090**	**167 484 078**
40	1 ¼	32	**167 484 091**	**167 484 079**
50	1 ½	40	**167 484 092**	**167 484 080**
63	2	50	**167 484 093**	**167 484 081**
75	2 ½	65	**167 484 094**	**167 484 082**
90	3	80	**167 484 095**	**167 484 083**
110	4	100	**167 484 096**	**167 484 084**

Spare parts cone check valves

Spare parts cone check valve type 561/562

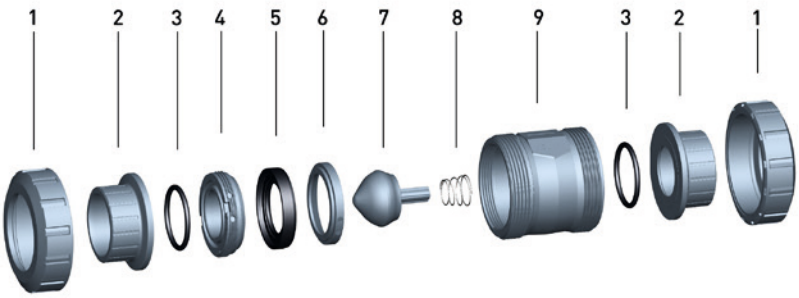

Central part without spring

Model:

- Central body consisting of: housing (9), union bush (4), support ring (6), cone (7), profile seal ring (5) and face seal (3)

d (mm)	Size (inch)	DN (mm)	PVC-C EPDM Code	PVC-C FKM Code
16	⅜	10	**163 485 201**	**163 485 211**
20	½	15	**163 485 201**	**163 485 211**
25	¾	20	**163 485 202**	**163 485 212**
32	1	25	**163 485 203**	**163 485 213**
40	1 ¼	32	**163 485 204**	**163 485 214**
50	1 ½	40	**163 485 205**	**163 485 215**
63	2	50	**163 485 206**	**163 485 216**
75	2 ½	65	**163 485 207**	**163 485 217**
90	3	80	**163 485 208**	**163 485 218**
110	4	100	**163 485 209**	**163 485 219**

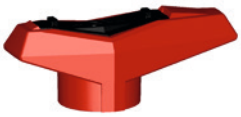

DN10/15 - 50

Handle for dismantling

d (mm)	Size (inch)	DN (mm)	red Code	black Code
16	⅜	10	**167 484 088**	**167 484 076**
20	½	15	**167 484 088**	**167 484 076**
25	¾	20	**167 484 089**	**167 484 077**
32	1	25	**167 484 090**	**167 484 078**
40	1 ¼	32	**167 484 091**	**167 484 079**
50	1 ½	40	**167 484 092**	**167 484 080**
63	2	50	**167 484 093**	**167 484 081**
75	2 ½	65	**167 484 094**	**167 484 082**
90	3	80	**167 484 095**	**167 484 083**
110	4	100	**167 484 096**	**167 484 084**

Face seal (3)

d (mm)	Size (inch)	DN (mm)	EPDM Code	FKM Code
16	⅜	10	**748 410 059**	**749 410 059**
20	½	15	**748 410 059**	**749 410 059**
25	¾	20	**748 410 106**	**749 410 106**

table continued on the next page

d (mm)	Size (inch)	DN (mm)	EPDM Code	FKM Code
32	1	25	**748 410 151**	**749 410 151**
40	1 ¼	32	**748 410 062**	**749 410 062**
50	1 ½	40	**748 410 003**	**749 410 003**
63	2	50	**748 410 231**	**749 410 231**
75	2 ½	65	**748 410 119**	**749 410 119**
90	3	80	**748 410 023**	**749 410 023**
110	4	100	**748 410 254**	**749 410 254**

Seal set

Model:

- Seal set consisting of: profile seal ring (5) and face seal (3)

d (mm)	Size (inch)	DN (mm)	EPDM Code	FKM Code
16	⅜	10	**161 485 241**	**161 485 251**
20	½	15	**161 485 241**	**161 485 251**
25	¾	20	**161 485 242**	**161 485 252**
32	1	25	**161 485 243**	**161 485 253**
40	1 ¼	32	**161 485 244**	**161 485 254**
50	1 ½	40	**161 485 245**	**161 485 255**
63	2	50	**161 485 246**	**161 485 256**
75	2 ½	65	**161 485 247**	**161 485 257**
90	3	80	**161 485 248**	**161 485 258**
110	4	100	**161 485 249**	**161 485 259**

Profile seal ring (5)

d (mm)	Size (inch)	DN (mm)	EPDM Code	FKM Code
16	⅜	10	**748 436 001**	**749 436 001**
20	½	15	**748 436 001**	**749 436 001**
25	¾	20	**748 436 002**	**749 436 002**
32	1	25	**748 436 003**	**749 436 003**
40	1 ¼	32	**748 436 004**	**749 436 004**
50	1 ½	40	**748 436 005**	**749 436 005**
63	2	50	**748 436 006**	**749 436 006**
75	2 ½	65	**748 436 007**	**749 436 007**
90	3	80	**748 436 008**	**749 436 008**
110	4	100	**748 436 009**	**749 436 009**

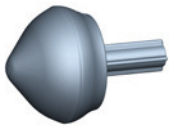

Cone (7)

d (mm)	Size (inch)	DN (mm)	PVC-C Code
16	⅜	10	**163 482 151**
20	½	15	**163 482 151**
25	¾	20	**163 482 152**
32	1	25	**163 482 153**
40	1 ¼	32	**163 482 154**
50	1 ½	40	**163 482 155**
63	2	50	**163 482 156**
75	2 ½	65	**163 482 157**
90	3	80	**163 482 158**
110	4	100	**163 482 159**

Spring (8)

Model:

- Material: NIMONIC 90, code: 2.4632
- Material: Stainless steel, code: 1.4310, HALAR® coated
- Material: Stainless steel, code: 1.4310

d (mm)	Size (inch)	DN (mm)	Stainless steel Code	Stainless steel HALAR coated Code	NIMONIC 90 Code
16 - 25	⅜ - ¼	10 - 20	**161 485 132**	**161 485 142**	**161 485 152**
32	1	25	**161 485 133**	**161 485 143**	**161 485 153**
40	1 ¼	32	**161 485 134**	**161 485 144**	**161 485 154**
50	1 ½	40	**161 485 135**	**161 485 145**	**161 485 155**
63	2	50	**161 485 136**	**161 485 146**	**161 485 156**
75	2 ½	65	**161 485 137**	**161 485 147**	**161 485 157**
90	3	80	**161 485 138**	**161 485 148**	**161 485 158**
110	4	100	**161 485 139**	**161 485 149**	**161 485 159**

Central part with spring

Model:

- Central body consisting of: housing (9), union bush (4), support ring (6), cone (7), spring V2A (8), profile seal ring (5) and face seal (3)

d (mm)	Size (inch)	DN (mm)	PVC-C EPDM Code	PVC-C FKM Code
16	⅜	10	**163 485 221**	**163 485 231**
20	½	15	**163 485 221**	**163 485 231**
25	¾	20	**163 485 222**	**163 485 232**
32	1	25	**163 485 223**	**163 485 233**
40	1 ¼	32	**163 485 224**	**163 485 234**
50	1 ½	40	**163 485 225**	**163 485 235**
63	2	50	**163 485 226**	**163 485 236**
75	2 ½	65	**163 485 227**	**163 485 237**
90	3	80	**163 485 228**	**163 485 238**
110	4	100	**163 485 229**	**163 485 239**

Spare parts and accessories

Accessories for valves

Ball valves

Transparent lever clip for ball valve labelling

Option:

- Component for ball valve Type 546 Pro, 543 Pro, 523 Pro
- Material: SAN
- UV-, weather- and chemical resistant
- Allows valve marking in conjunction with perforated printing sheets
- Perforated printing sheets are not included (depending on dimension see 198 807 231 - 198807 236)

Inch (inch)	d-d (mm)	DN-DN (mm)	Code	Quantity
⅜ - ½	16 - 20	10 - 15	**198 807 221**	10 pc's
¾ - 1	25 - 32	20 - 25	**198 807 222**	10 pc's
1 ¼ - 1 ½	40 - 50	32 - 40	**198 807 223**	5 pc's
2	63	50	**198 807 224**	5 pc's
2 ½ - 3	75 - 90	65 - 80	**198 807 225**	5 pc's
4	110	100	**198 807 226**	5 pc's

Printing sheets for ball valve labelling

Option:

- Component for ball valve Type 546 Pro, 543 Pro, 523 Pro
- Material: DIN A4 Polymer-sheet
- UV-, weather- and chemical resistant
- Allows valve marking in conjunction with transparent lever clip
- Can be labelled with laser printers or by hand
- Transparent lever clip is not included (depending on dimension see 198 807 221 - 198 807 226)

Inch (inch)	d-d (mm)	DN-DN (mm)	Code	Quantity
⅜ - ½	16 - 20	10 - 15	**198 807 231**	25 Sheets with each 48 Labels
¾ - 1	25 - 32	20 - 25	**198 807 232**	25 Sheets with each 24 Labels
1 ¼ - 1 ½	40 - 50	32 - 40	**198 807 233**	25 Sheets with each 18 Labels
2	63	50	**198 807 234**	25 Sheets with each 11 Labels
2 ½ - 3	75 - 90	65 - 80	**198 807 235**	25 Sheets with each 6 Labels
4	110	100	**198 807 236**	25 Sheets with each 4 Labels
⅜ - ½	16 - 20	10 - 15	**198 807 241**	100 Sheets with each 48 Labels
¾ - 1	25 - 32	20 - 25	**198 807 242**	100 Sheets with each 24 Labels
1 ¼ - 1 ½	40 - 50	32 - 40	**198 807 243**	100 Sheets with each 18 Labels
2	63	50	**198 807 244**	100 Sheets with each 11 Labels

Ball valves and check valves

Adapter ring for valves

- Suitable for ball valve type 546/543/523/547 and check valves type 561/591
- Adapter ring enables standard union ends (e.g. metal inserts made of stainless steel, brass or malleable cast iron with R or Rp thread) for use with Ball Valves and Check Valves
- Material: PP-GF (30% glass-fibre reinforced)

d (mm)	DN (mm)	Code	Weight (kg)
20	15	**167 481 182**	0.003
25	20	**167 481 183**	0.003
32	25	**167 481 184**	0.004
40	32	**167 481 185**	0.008
50	40	**167 481 186**	0.014
63	50	**167 481 187**	0.026

Diaphragm valves new generation

Electrical feedback module I40/I41
With limit switches Ag Ni or AU

Model:

- No height increase
- Easy, fast and safe installation
- Accessory to hand operated diaphragm valve 514 - 519
- Self adjusting mechanism
- Including plug 3P+E / protection: IP65

Size	d-d (mm)	DN-DN (mm)	Ag Ni Code	Weight (kg)	AU Code	Weight (kg)
1	10 - 25	10 - 20	**198 151 335**	0.095	**198 151 336**	0.120
2	32 - 40	25 - 32	**198 151 337**	0.101	**198 151 338**	0.101
3	50 - 63	40 - 50	**198 151 339**	0.154	**198 151 340**	0.120

Spare parts

Spare parts Industry

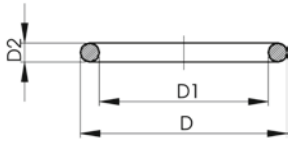

O-Ring Gasket

Model:

- Suitable for union PP-N 28 51 85
- Hardness approx. 65° Shore

d (mm)	Size (inch)	DN (mm)	EPDM Code	Weight (kg)	FKM Code	Weight (kg)	D (mm)	D1 (mm)	D2 (mm)
20	½	15	**748 410 140**	0.023	**749 410 140**	0.020	20.32	15.08	2.62
25	¾	20	**748 410 006**	0.002	**749 410 006**	0.002	27.28	20.22	3.53
32	1	25	**748 410 025**	0.010	**749 410 025**	0.002	32.05	24.99	3.53
40	1 ¼	32	**748 410 152**	0.005	**749 410 152**	0.003	41.78	31.12	5.34
50	1 ½	40	**748 410 009**	0.003	**749 410 009**	0.007	51.33	40.65	5.34
63	2	50	**748 410 171**	0.005	**749 410 171**	0.007	60.84	50.16	5.34

Spare parts Industry valves

Connecting parts for
Ball valves 546/543/523
Check valves 561/562
Ventilating & bleed valves 591/595

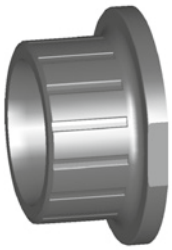

Solvent cement socket

d (mm)	Size (inch)	DN (mm)
16	⅜	10
20	½	15
25	¾	20
32	1	25
40	1 ¼	32
50	1 ½	40
63	2	50
75	2 ½	65
90	3	80
110	4	100

d (mm)	PVC-U metric (G01) Code	PVC-U BS (G04) Code	PVC-U ASTM (G03) Code	PVC-C metric (G11) Code	PVC-C ASTM (G13) Code	ABS metric (G20) Code
16	**161 490 666**	**161 490 734**	**161 490 712**	**163 481 275**	**163 481 311**	**169 480 775**
20	**161 490 667**	**161 490 735**	**161 490 713**	**163 481 276**	**163 481 312**	**169 480 776**
25	**161 490 668**	**161 490 736**	**161 490 714**	**163 481 277**	**163 481 313**	**169 480 777**
32	**161 490 669**	**161 490 737**	**161 490 715**	**163 481 278**	**163 481 314**	**169 480 778**
40	**161 490 670**	**161 490 738**	**161 490 716**	**163 481 279**	**163 481 315**	**169 480 779**
50	**161 490 671**	**161 490 739**	**161 490 717**	**163 481 280**	**163 481 316**	**169 480 780**
63	**161 490 672**	**161 490 740**	**161 490 718**	**163 481 281**	**163 481 317**	**169 480 781**
75	**161 490 673**	**161 490 673**	**161 490 719**	**163 481 282**	**163 481 318**	**169 480 782**
90	**161 490 674**	**161 490 742**	**161 490 720**	**163 481 283**	**163 481 319**	**169 480 783**
110	**161 490 675**	**161 490 743**	**161 490 721**	**163 481 284**	**163 481 320**	**169 480 784**

d (mm)	ABS BS (G21) Code
16	**169 480 800**
20	**169 480 801**
25	**169 480 802**
32	**169 480 803**
40	**169 480 804**
50	**169 480 805**
63	**169 480 806**
75	**169 480 782**
90	**169 480 808**
110	**169 480 809**

Solvent cement spigot

d (mm)	DN (mm)	PVC-U metric (G05) Code	PVC-C metric (G14) Code
16	10	**161 490 701**	**163 481 300**
20	15	**161 490 702**	**163 481 301**
25	20	**161 490 703**	**163 481 302**
32	25	**161 490 704**	**163 481 303**
40	32	**161 490 705**	**163 481 304**
50	40	**161 490 706**	**163 481 305**
63	50	**161 490 707**	**163 481 306**
75	65	**161 490 708**	**163 481 307**
90	80	**161 490 709**	**163 481 308**
110	100	**161 490 710**	**163 481 309**

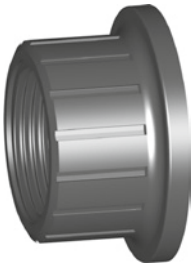

Threaded socket

Size (inch)	DN (mm)
⅜	10
½	15
¾	20
1	25
1 ¼	32
1 ½	40
2	50
2 ½	65
3	80
4	100

Size (inch)	PVC-U Rp (G06) Code	PVC-U Rp reinforced (G07) Code	PVC-U NPT (G09) Code	PVC-C Rp (G15) Code	PVC-C Rp reinforced (G16) Code	PVC-C NPT (G17) Code
⅜	161 490 690	161 490 825	161 490 723	163 481 286	163 481 400	163 481 322
½	161 490 691	161 490 826	161 490 724	163 481 287	163 481 401	163 481 323
¾	161 490 692	161 490 827	161 490 725	163 481 288	163 481 402	163 481 324
1	161 490 693	161 490 828	161 490 726	163 481 289	163 481 403	163 481 325
1 ¼	161 490 694	161 490 829	161 490 727	163 481 290	163 481 404	163 481 326
1 ½	161 490 695	161 490 830	161 490 728	163 481 291	163 481 405	163 481 327
2	161 490 696	161 490 831	161 490 729	163 481 292	163 481 406	163 481 328
2 ½	161 490 697		161 490 730	163 481 293		163 481 329
3	161 490 698		161 490 731	163 481 294		163 481 330
4	161 490 699		161 490 732	163 481 295		163 481 331

Size (inch)	ABS Rp (G22) Code	ABS Rp reinforced (G23) Code	PP-H Rp reinforced (G33) Code	PP-H NPT reinforced (G34) Code	PVDF NPT (G53) Code
⅜	169 480 786	169 480 925	167 482 911	167 482 966	175 483 058
½	169 480 787	169 480 926	167 482 912	167 482 967	175 483 059
¾	169 480 788	169 480 927	167 482 913	167 482 968	175 483 060
1	169 480 789	169 480 928	167 482 914	167 482 969	175 483 061
1 ¼	169 480 790	169 480 929	167 482 915	167 482 970	175 483 062
1 ½	169 480 791	169 480 930	167 482 916	167 482 971	175 483 063
2	169 480 792	169 480 931	167 482 917	167 482 972	175 483 064
2 ½					
3					
4					

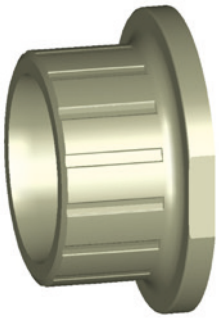

Fusion socket

d (mm)	DN (mm)	PN (bar)	PP-H metric (G30) Code	PVDF metric (G50) Code	D (mm)	D1 (mm)	L (mm)	L1 (mm)	z (mm)
16	10	10	167 482 900	175 483 025	38	23	19	4	5
20	15	10	167 482 901	175 483 026	38	27	20	4	5
25	20	10	167 482 902	175 483 027	44	33	22	5	6
32	25	10	167 482 903	175 483 028	53	41	24	5	6
40	32	10	167 482 904	175 483 029	65	51	26	5	7
50	40	10	167 482 905	175 483 030	77	62	29	6	8
63	50	10	167 482 906	175 483 031	99	77	34	7	6
75	65	10	167 482 907	175 483 032	125	92	49	9	20
90	80	10	167 482 908	175 483 033	150	110	57	10	24
110	100	10	167 482 909	175 483 034	180	134	69	11	30

Socket fusion spigot IR-Plus®

d (mm)	DN (mm)	PP-H metric (G32) Code	PVDF metric (G51) Code
16	10	167 482 922	175 483 036
20	15	167 482 923	175 483 037
25	20	167 482 924	175 483 038
32	25	167 482 925	175 483 039
40	32	167 482 926	175 483 040
50	40	167 482 927	175 483 041
63	50	167 482 928	175 483 042
75	65	167 482 929	
90	80	167 482 930	
110	100	167 482 931	

Butt fusion spigot IR-Plus®

d (mm)	DN (mm)	PP-H metric SDR11 (G35) Code	PP-H metric long SDR11 (G37) Code	PP-N metric SDR11 Code	PVDF metric (G52) Code
20	15	167 482 945	167 482 956	168 480 260	175 483 048
25	20	167 482 946	167 482 957	168 480 261	175 483 049
32	25	167 482 947	167 482 958	168 480 262	175 483 050
40	32	167 482 948	167 482 959	168 480 263	175 483 051
50	40	167 482 949	167 482 960	168 480 264	175 483 052
63	50	167 482 950	167 482 961	168 480 265	175 483 053
75	65	167 482 951			175 483 054
90	80	167 482 952			175 483 055
110	100	167 482 953			175 483 056

Butt fusion spigot PE100 IR-Plus®

d (mm)	DN (mm)	metric SDR11 (G41) Code	metric long SDR11 (G43) Code
20	15	193 480 102	193 480 152
25	20	193 480 103	193 480 153
32	25	193 480 104	193 480 154
40	32	193 480 105	193 480 155
50	40	193 480 106	193 480 156
63	50	193 480 107	193 480 157
75	65		193 480 158
90	80		193 480 159
110	100		193 480 160

Fixed flange

d (mm)	DN (mm)	PVC-U metric (G60) Code	PP-H metric (G63) Code	PVDF metric (G64) Code
20	15	161 486 360	167 484 160	175 483 285
25	20	161 486 361	167 484 161	175 483 286
32	25	161 486 362	167 484 162	175 483 287
40	32	161 486 363	167 484 163	175 483 288
50	40	161 486 364	167 484 164	175 483 289
63	50	161 486 365	167 484 165	175 483 290

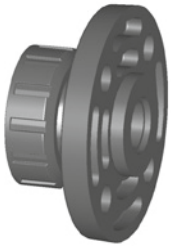

Backing flange

d (mm)	Size (inch)	DN (mm)
20	½	15
25	¾	20
32	1	25
40	1 ¼	32
50	1 ½	40
63	2	50
75	2 ½	65
90	3	80
110	4	100

d (mm)	PVC-U metric (G70) Code	PVC-U ANSI (G71) Code	PVC-U PP-St metric (G72) Code	PVC-U PP-St ANSI (G73) Code	PVC-C PP-St metric (G72) Code	PVC-C PP-St ANSI (G73) Code
20	**161 486 265**	**161 486 275**	**161 486 285**	**161 486 425**	**163 481 412**	**163 481 425**
25	**161 486 266**	**161 486 276**	**161 486 286**	**161 486 426**	**163 481 413**	**163 481 426**
32	**161 486 267**	**161 486 277**	**161 486 287**	**161 486 427**	**163 481 414**	**163 481 427**
40	**161 486 268**	**161 486 278**	**161 486 288**	**161 486 428**	**163 481 415**	**163 481 428**
50	**161 486 269**	**161 486 279**	**161 486 289**	**161 486 429**	**163 481 416**	**163 481 429**
63	**161 486 270**	**161 486 280**	**161 486 290**	**161 486 430**	**163 481 417**	**163 481 430**
75	**161 486 271**	**161 486 281**	**161 486 291**	**161 486 431**	**163 481 418**	**163 481 431**
90	**161 486 272**	**161 486 282**	**161 486 292**	**161 486 432**	**163 481 419**	**163 481 432**
110	**161 486 273**	**161 486 283**	**161 486 293**	**161 486 433**	**163 481 420**	**163 481 433**

d (mm)	PP-H PP-St ANSI (G73) Code
20	**167 484 065**
25	**167 484 066**
32	**167 484 067**
40	**167 484 068**
50	**167 484 069**
63	**167 484 070**
75	**167 484 071**
90	**167 484 072**
110	**167 484 073**

Union nut

d (mm)	DN (mm)	PVC-U Code	PVC-C Code	ABS Code	PP-H Code	PVDF Code
16	10	**161 490 538**	**163 481 226**	**169 480 713**	**167 482 712**	**175 482 937**
20	15	**161 490 538**	**163 481 226**	**169 480 713**	**167 482 712**	**175 482 937**
25	20	**161 490 539**	**163 481 227**	**169 480 714**	**167 482 713**	**175 482 938**
32	25	**161 490 540**	**163 481 228**	**169 480 715**	**167 482 714**	**175 482 939**
40	32	**161 490 541**	**163 481 229**	**169 480 716**	**167 482 715**	**175 482 940**
50	40	**161 490 542**	**163 481 230**	**169 480 717**	**167 482 716**	**175 482 941**
63	50	**161 490 543**	**163 481 231**	**169 480 718**	**167 482 717**	**175 482 942**
75	65	**161 490 544**	**163 481 232**	**169 480 719**	**167 482 718**	**175 482 943**
90	80	**161 490 545**	**163 481 233**	**169 480 720**	**167 482 719**	**175 482 944**
110	100	**161 490 546**	**163 481 234**	**169 480 721**	**167 482 720**	**175 482 945**

Spare parts wafer check valve type 369

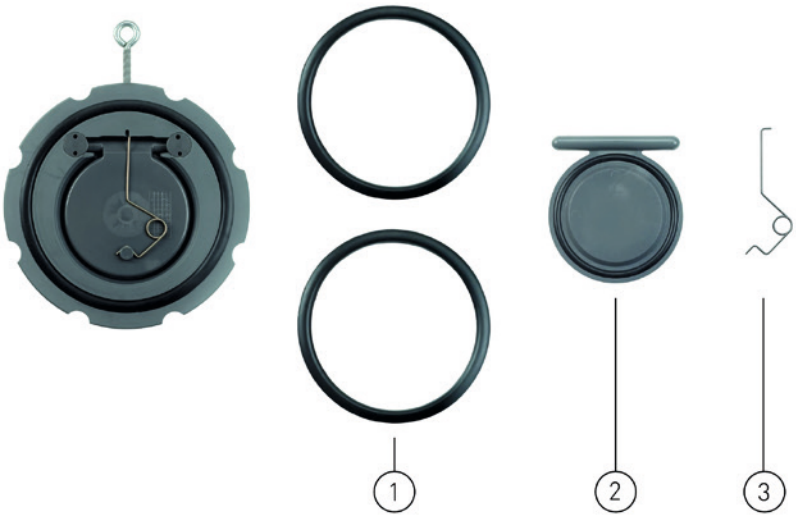

Seal set (1)

d (mm)	Size (inch)	DN (mm)	EPDM Code	FKM Code
40	1 ¼	32		161 484 887
50	1 ½	40	161 484 876	161 484 888
63	2	50	161 484 877	161 484 889
75	2 ½	65	161 484 878	161 484 890
90	3	80	161 484 879	161 484 891
110	4	100	161 484 880	161 484 892
140	5	125	161 484 881	161 484 893
160	6	150	161 484 882	161 484 894
225	8	200	161 484 883	161 484 895
280	10	250	161 484 884	161 484 896
315	12	300	161 484 885	161 484 897

Disc set (2)

d (mm)	Size (inch)	DN (mm)	PVC-U EPDM Code	PVC-U FKM Code	PP-H EPDM Code	PP-H FKM Code	PVDF FKM Code
40	1 ¼	32	161 369 122	161 369 142	167 369 122	167 369 142	175 369 142
50	1 ½	40	161 369 123	161 369 143	167 369 123	167 369 143	175 369 143
63	2	50	161 369 124	161 369 144	167 369 124	167 369 144	175 369 144
75	2 ½	65	161 369 125	161 369 145	167 369 125	167 369 145	175 369 145
90	3	80	161 369 126	161 369 146	167 369 126	167 369 146	175 369 146
110	4	100	161 369 127	161 369 147	167 369 127	167 369 147	175 369 147
140	5	125	161 369 128	161 369 148	167 369 128	167 369 148	175 369 148
160	6	150	161 369 129	161 369 149	167 369 129	167 369 149	175 369 149
225	8	200	161 369 130	161 369 150	167 369 130	167 369 150	175 369 150
280	10	250	161 369 131	161 369 151	167 369 131	167 369 151	175 369 151
315	12	300	161 369 132	161 369 152	167 369 132	167 369 152	175 369 152

Spring (3)

d (mm)	Size (inch)	DN (mm)	V4A Code	Hastelloy C Code
40	1 ¼	32	**161 484 900**	**161 484 912**
50	1 ½	40	**161 484 901**	**161 484 913**
63	2	50	**161 484 902**	**161 484 914**
75	2 ½	65	**161 484 903**	**161 484 915**
90	3	80	**161 484 904**	**161 484 916**
110	4	100	**161 484 905**	**161 484 917**
140	5	125	**161 484 905**	**161 484 917**
160	6	150	**161 484 907**	**161 484 919**
225	8	200	**161 484 908**	**161 484 920**
280	10	250	**161 484 909**	**161 484 921**
315	12	300	**161 484 910**	**161 484 922**

Spare parts butterfly valve type 567/578

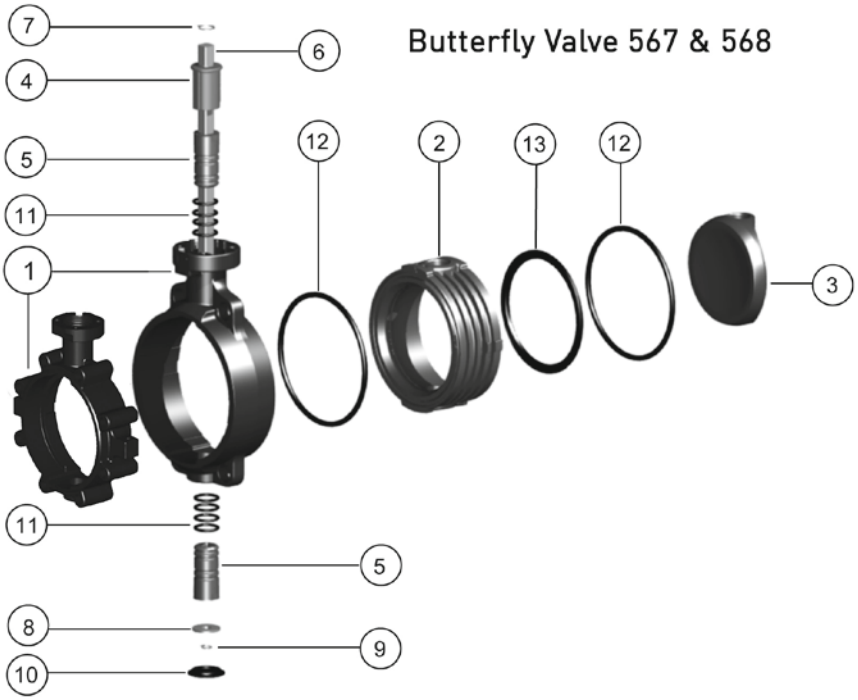

Inner body for Butterfly Valve Type 567 and 578

Model:

- Inner body consisting of: inner body (2) and profile seal (13)

d (mm)	Size (inch)	DN (mm)
63	2	50
75	2 ½	65
90	3	80
110	4	100
140	5	125
160	6	150
225	8	200
280	10	250
315	12	300

table continued on the next page

d (mm)	PVC-U EPDM Code	PVC-U FKM Code	PVC-C EPDM Code	PVC-C FKM Code	ABS EPDM Code	PP-H EPDM Code
63	161 486 861	161 486 873	163 481 591	163 481 603	169 481 067	167 484 271
75	161 486 862	161 486 874	163 481 592	163 481 604	169 481 068	167 484 272
90	161 486 863	161 486 875	163 481 593	163 481 605	169 481 069	167 484 273
110	161 486 864	161 486 876	163 481 594	163 481 606	169 481 070	167 484 274
140	161 486 865	161 486 877	163 481 595	163 481 607	169 481 071	167 484 275
160	161 486 866	161 486 878	163 481 596	163 481 608	169 481 072	167 484 276
225	161 486 867	161 486 879	163 481 597	163 481 609	169 481 073	167 484 277
280	161 486 868	161 486 880	163 481 598	163 481 610		167 484 278
315	161 486 869	161 486 881	163 481 599	163 481 611		167 484 279

d (mm)	PP-H FKM Code	PVDF FKM Code	PVDF PTFE Code
63	167 484 286	175 483 413	175 483 752
75	167 484 287	175 483 414	175 483 753
90	167 484 288	175 483 415	175 483 754
110	167 484 289	175 483 416	175 483 755
140	167 484 290	175 483 417	175 483 756
160	167 484 291	175 483 418	175 483 757
225	167 484 292	175 483 419	175 483 758
280	167 484 293	175 483 420	175 483 759
315	167 484 294	175 483 421	175 483 760

Disc for Butterfly Valve Type 567 and 578

d (mm)	Size (inch)	DN (mm)	PVC-U Code	PVC-C Code	ABS Code	PP-H Code	PVDF Code
63	2	50	161 490 889	163 481 451	169 480 951	167 483 226	175 483 251
75	2 ½	65	161 490 890	163 481 452	169 480 952	167 483 227	175 483 252
90	3	80	161 490 891	163 481 453	169 480 953	167 483 228	175 483 253
110	4	100	161 490 892	163 481 454	169 480 954	167 483 229	175 483 254
140	5	125	161 490 893	163 481 455	169 480 955	167 483 230	175 483 255
160	6	150	161 490 894	163 481 456	169 480 956	167 483 231	175 483 256
225	8	200	161 490 895	163 481 457	169 480 957	167 483 232	175 483 257
280	10	250	161 490 896	163 481 458	169 480 958	167 483 233	175 483 258
315	12	300	161 490 897	163 481 459	169 480 959	167 483 234	175 483 259
355	14	350				167 483 235	
400	16	400				167 483 236	
450	18	450				167 483 237	
500	20	500				167 483 238	
630	24	600				167 483 239	

Bearing bush for Butterfly Valve Type 567 and 578

Model:

- Included in delivery 2 pcs.
- With o-ring
- Bearing bushes in PP-H are used in PP-H and ABS butterfly valves

d (mm)	Size (inch)	DN (mm)	PVC-U EPDM Code	PVC-U FKM Code	PVC-C EPDM Code	PVC-C FKM Code
63, 75, 90	2, 2½, 3	50, 65, 80	**161 486 886**	**161 486 892**	**163 481 576**	**163 481 582**
110, 140	4, 5	100, 125	**161 486 887**	**161 486 893**	**163 481 577**	**163 481 583**
160, 225	6, 8	150, 200	**161 486 888**	**161 486 894**	**163 481 578**	**163 481 584**
280, 315	10, 12	250, 300	**161 486 889**	**161 486 895**	**163 481 579**	**163 481 585**
355	14	350				
400	16	400				
450	18	450				
500	20	500				
630	24	600				

d (mm)	Size (inch)	DN (mm)	PP-H EPDM Code	PP-H FKM Code	PVDF FKM Code
63, 75, 90	2, 2½, 3	50, 65, 80	**167 484 259**	**167 484 265**	**175 483 426**
110, 140	4, 5	100, 125	**167 484 260**	**167 484 266**	**175 483 427**
160, 225	6, 8	150, 200	**167 484 261**	**167 484 267**	**175 483 428**
280, 315	10, 12	250, 300	**167 484 262**	**167 484 268**	**175 483 429**
355	14	350	**167 484 263**	**167 484 269**	
400	16	400	**167 484 264**	**167 484 270**	
450	18	450	**167 484 280**	**167 484 283**	
500	20	500	**167 484 281**	**167 484 284**	
630	24	600	**167 484 282**	**167 484 285**	

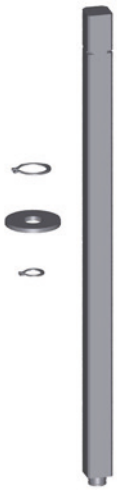

Shaft set for Butterfly Valve Type 567 and 578

Model:

- Shaft set consisting of: shaft chrom steel 1.4404 (SUS316L) (6), retention ring (7, 9) and washer (8)

d (mm)	Size (inch)	DN (mm)	Code
63	2	50	**161 486 899**
75	2 ½	65	**161 486 900**
90	3	80	**161 486 901**
110	4	100	**161 486 902**
140	5	125	**161 486 903**
160	6	150	**161 486 904**
225	8	200	**161 486 905**
280	10	250	**161 486 906**
315	12	300	**161 486 907**
355	14	350	**161 486 908**
400	16	400	**161 486 909**
450	18	450	**161 486 926**
500	20	500	**161 486 927**
630	24	600	**161 486 928**

Hand lever for Butterfly Valve Type 567 and 578

d (mm)	Size (inch)	DN (mm)	with index plate Code	with fine adjustment Code
63	2	50	**161 486 690**	**161 486 325**
75	2 ½	65	**161 486 690**	**161 486 325**
90	3	80	**161 486 690**	**161 486 325**

table continued on the next page

d (mm)	Size (inch)	DN (mm)	with index plate Code	with fine adjustment Code
110	4	100	**161 486 691**	**161 486 326**
140	5	125	**161 486 691**	**161 486 326**
160	6	150	**161 486 694**	**161 486 327**
225	8	200	**161 486 695**	**161 486 328**
280	10	250	**161 486 697**	
315	12	300	**161 486 697**	

Reduction gear with handwheel for Butterfly Valve Type 565, 567 and 578

- For valve actuation via a reduction gear with hand wheel. Suitable for all GF butterfly valves.
- Intermediate elements are required.
- This version is not recommended to use in outside or corrosive environment

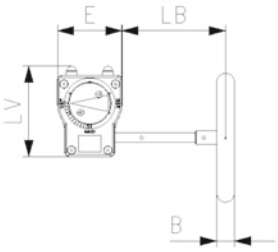

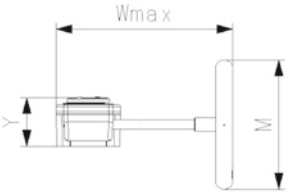

DN (mm)	Code	Wmax (mm)	LV (mm)	Y (mm)	M (mm)	B (mm)	E (mm)	LB (mm)
50 - 200	**161 483 471**	221.0	112.3	61.2	160.0	23.0	80.0	129.5
250 - 300	**161 483 472**	246.3	130.0	68.4	200.0	24.6	100.0	134.0

Snap ring DN350-600 for Butterfly Valve Type 567

- For fixation of profile seal in body

d (mm)	Size (inch)	DN (mm)	PP-H Code
355	14	350	**167 484 295**
400	16	400	**167 484 296**
450	18	450	**167 484 297**
500	20	500	**167 484 298**
630	24	600	**167 484 299**

Profile seal (13) DN350-600 for Butterfly Valve Type 567

d (mm)	Size (inch)	DN (mm)	EPDM Code	FKM Code
355	14	350	**748 440 018**	**749 440 028**
400	16	400	**748 440 019**	**749 440 029**
450	18	450	**748 440 020**	**749 440 030**
500	20	500	**748 440 021**	**749 440 031**
630	24	600	**748 440 022**	**749 440 032**

Intermediate element for Butterfly Valve Type 567 and 578 (reduction gear)

d (mm)	DN (mm)	Code
63	50	**198 000 621**
75	65	**198 000 621**
90	80	**198 000 621**
110	100	**198 000 622**
140	125	**198 000 622**
140	150	**198 000 600**
140	150	**198 000 600**
280	250	**198 000 732**
280	250	**198 000 732**

Spare parts laboratory ball valve type 322

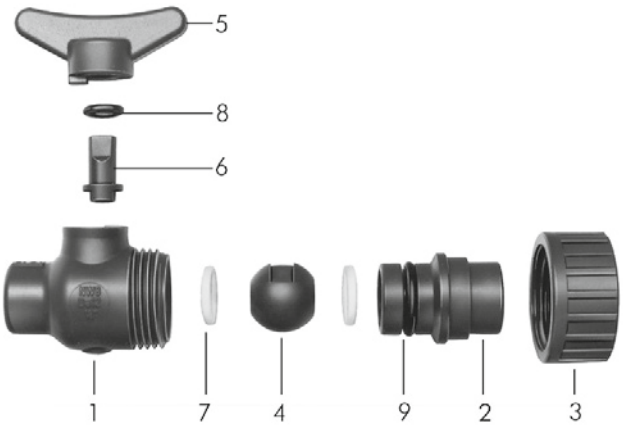

Ball set

Model:

- Ball seals standard in PTFE
- Ball set consisting of: ball (4), stem (6), ball- and stem seal (7-8)

d (mm)	Inch (inch)	DN (mm)	PVC-U EPDM Code	PVC-U FKM Code
10	⅛	6	**161 482 978**	**161 482 980**
12	¼	8	**161 482 978**	**161 482 980**

Lever

d (mm)	Inch (inch)	DN (mm)	PVC-U Code
10	⅛	6	**161 322 205**
12	¼	8	**161 322 205**

Seal set

Model:

- Seal set consisting of: stem- and body seal (8-9)

d (mm)	Inch (inch)	DN (mm)	EPDM Code
10	⅛	6	**161 482 982**
12	¼	8	**161 482 982**

Valve end with socket metric

d (mm)	Inch (inch)	DN (mm)	PVC-U Code
10	⅛	6	**161 322 152**
12	¼	8	**161 322 202**

Spare parts metering ball valve type 323

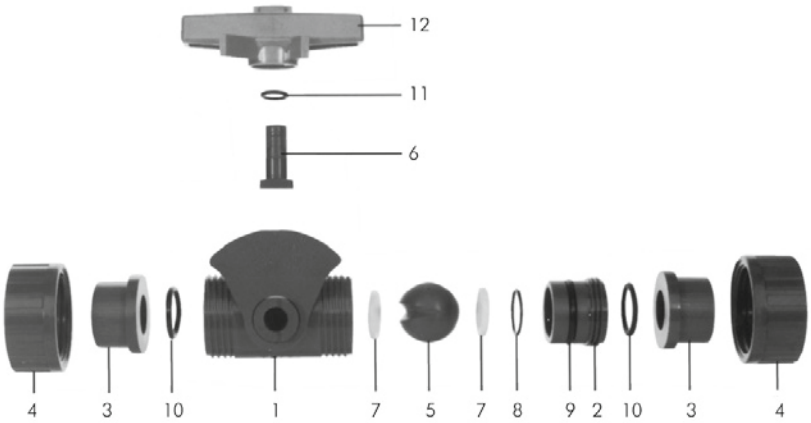

Threaded bush Rc/NPT

Size (inch)	DN (mm)	PVC-U NPT Code	PVDF NPT Code
⅜	10	**161 482 389**	**175 480 727**
½	15	**161 482 390**	**175 480 728**

Threaded bush Rp

DN (mm)	Rp (inch)	PVC-U Code	PVC-C Code	ABS Code	PP-H Code
10	⅜	**161 480 550**	**163 480 832**	**169 480 120**	**167 480 166**
15	½	**161 480 551**	**163 480 833**	**169 480 121**	**167 480 167**

Spare parts ball valve type 355

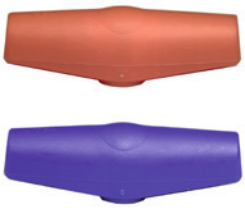

Lever PP

Size (inch)	DN (mm)	blue Code
½	15	**167 481 090**
¾	20	**167 481 091**
1	25	**167 481 091**
1 ¼	32	**167 481 092**
1 ½	40	**167 481 092**
2	50	**167 481 093**

Spare parts ball valve type 354

Union nut

d (mm)	Size (inch)	DN (mm)	PVC-U Code
20	½	15	**721 690 006**
25	¾	20	**721 690 007**
32	1	25	**721 690 008**
40	1 ¼	32	**721 690 009**
50	1 ½	40	**721 690 010**
63	2	50	**721 690 011**

Face seal

d (mm)	Size (inch)	DN (mm)	EPDM Code
20	½	15	**748 410 042**
25	¾	20	**748 410 116**
32	1	25	**748 410 103**
40	1 ¼	32	**748 410 027**
50	1 ½	40	**748 410 010**
63	2	50	**748 410 011**

Spare parts ball valve type 355

Central part

d (mm)	Size (inch)	DN (mm)	EPDM Code
20	½	15	**161 483 837**
25	¾	20	**161 483 838**
32	1	25	**161 483 839**
40	1 ¼	32	**161 483 840**
50	1 ½	40	**161 483 841**
63	2	50	**161 483 842**

Spare parts metering ball valve type 523

Central part For Ball valve type 523

Model:

- Every connecting pieces and union nuts are listed on product range industry valves
- Ball seals standard in PTFE
- Central part consisting of: body, union bush, ball, stem, ball-, backing-, body-, face- and stem seal, standard lever and threaded inserts stainless steel

d (mm)	Size (inch)	DN (mm)	PVC-U EPDM Code	PVC-U FKM Code	PP-H EPDM Code	PP-H FKM Code
16	⅜	10	**161 485 351**	**161 485 361**	**167 485 371**	**167 485 381**
20	½	15	**161 485 353**	**161 485 363**	**167 485 373**	**167 485 383**

Spare parts shipbuilding ball valve type 547

Service housing kit

Model:

- With integrated check valve and filter

D (mm)	Size (inch)	DN (mm)	Code
16	⅜	10	**167 547 905**

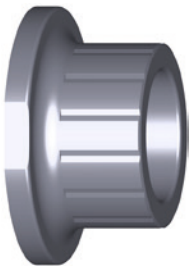

Valve end fusion socket PB

d (mm)	Size (inch)	DN (mm)	Code
16	⅜	10	**167 547 441**
20	½	15	**167 547 442**

Valve end iFIT

D (mm)	Size (inch)	DN (mm)	Code
20	½	15	**167 547 112**

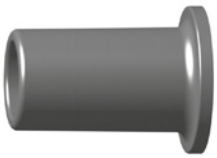

Service housing end connector kit
With fusion socket PB

d (mm)	Size (inch)	DN (mm)	Code
16	⅜	10	**167 547 931**
20	½	15	**167 547 932**

Service housing end connector kit with iFIT connector

d (mm)	Size (inch)	DN (mm)	Code
20	½	15	**167 547 902**

Spare parts ball valve type 543 vertical

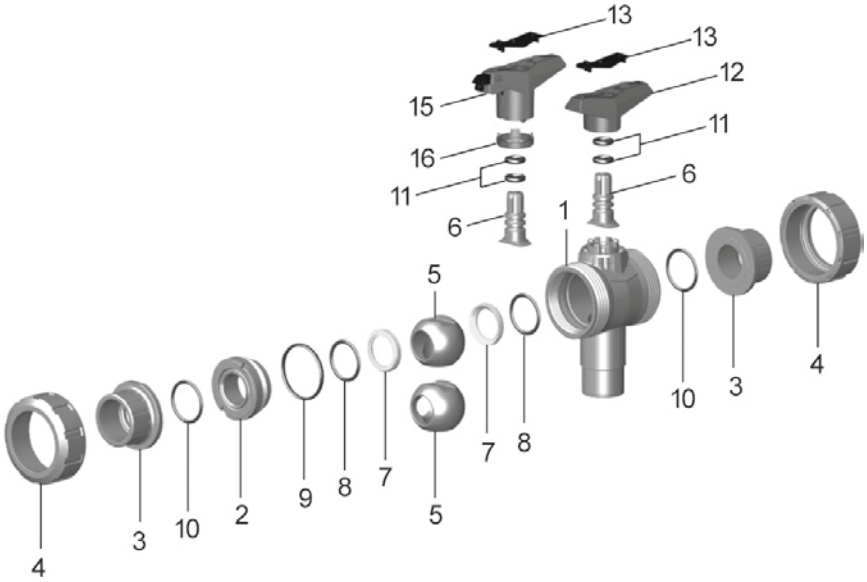

Central part for Ball valve type 543 Pro
T-port
Vertical

Model:

- Ball seals standard in PTFE
- Central part consisting of: body, union bush, ball, stem, standard lever, stainless steel threaded inserts and seal for: ball, backing, body, face and stem

d (mm)	Size (inch)	DN (mm)	PVC-U EPDM Code	PVC-U FKM Code	ABS EPDM Code
16	⅜	10	**161 488 061**	**161 488 071**	**169 481 231**
20	½	15	**161 488 062**	**161 488 072**	**169 481 232**
25	¾	20	**161 488 063**	**161 488 073**	**169 481 233**
32	1	25	**161 488 064**	**161 488 074**	**169 481 234**
40	1 ¼	32	**161 488 065**	**161 488 075**	**169 481 235**
50	1 ½	40	**161 488 066**	**161 488 076**	**169 481 236**
63	2	50	**161 488 067**	**161 488 077**	**169 481 237**

Central part for Ball valve type 543 Pro
L-port
Vertical

Model:

- Ball seals standard in PTFE
- Central part consisting of: body, union bush, ball, stem, standard lever, stainless steel threaded inserts and seal for: ball, backing, body, face and stem
- Every connecting pieces and union nuts are listed on product range industry valves

d (mm)	Size (inch)	DN (mm)	PVC-U EPDM Code	PVC-U FKM Code	ABS EPDM Code
16	⅜	10	**161 488 041**	**161 488 051**	**169 481 221**
20	⅜	15	**161 488 042**	**161 488 052**	**169 481 222**
25	¾	20	**161 488 043**	**161 488 053**	**169 481 223**
32	1	25	**161 488 044**	**161 488 054**	**169 481 224**
40	1 ¼	32	**161 488 045**	**161 488 055**	**169 481 225**
50	1 ½	40	**161 488 046**	**161 488 056**	**169 481 226**
63	2	50	**161 488 047**	**161 488 057**	**169 481 227**

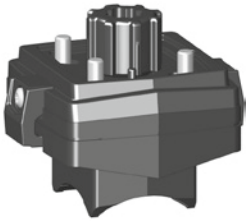

Assembly kit

Model:

- Intermediate element for ball valve type 543 vertical and electric or pneumatic actuators EA21; PA11/21
- Including screws

d (mm)	Inch (inch)	DN (mm)	Code
16 - 20	⅜ - ½	10 - 15	**167 484 945**
25 - 32	¾ - 1	20 - 25	**167 484 946**
40 - 50	1 ¼ - 1 ½	32 - 40	**167 484 947**
63	2	50	**167 484 948**

Face seal

Model:

- Face seal no. 10

d (mm)	Size (inch)	DN (mm)	EPDM Code	FKM Code
16	⅜	10	**748 410 059**	**749 410 059**
20	½	15	**748 410 059**	**749 410 059**
25	¾	20	**748 410 106**	**749 410 106**
32	1	25	**748 410 151**	**749 410 151**
40	1 ¼	32	**748 410 062**	**749 410 062**
50	1 ½	40	**748 410 003**	**749 410 003**
63	2	50	**748 410 231**	**749 410 231**

Lever

d (mm)	Size (inch)	DN (mm)	Standard lever L-port red Code	Standard lever diverter ball red Code	Multifunctional-lever L-port red Code	Multifunctional-lever diverter ball red Code
16	⅜	10	**167 484 688**	**167 484 788**	**167 484 642**	**167 484 742**
20	½	15	**167 484 688**	**167 484 788**	**167 484 642**	**167 484 742**
25	¾	20	**167 484 689**	**167 484 789**	**167 484 643**	**167 484 743**
32	1	25	**167 484 690**	**167 484 790**	**167 484 644**	**167 484 744**
40	1 ¼	32	**167 484 691**	**167 484 791**	**167 484 645**	**167 484 745**
50	1 ½	40	**167 484 692**	**167 484 792**	**167 484 646**	**167 484 746**
63	2	50	**167 484 693**	**167 484 793**	**167 484 647**	**167 484 747**

Spare parts ball valve type 543 horizontal

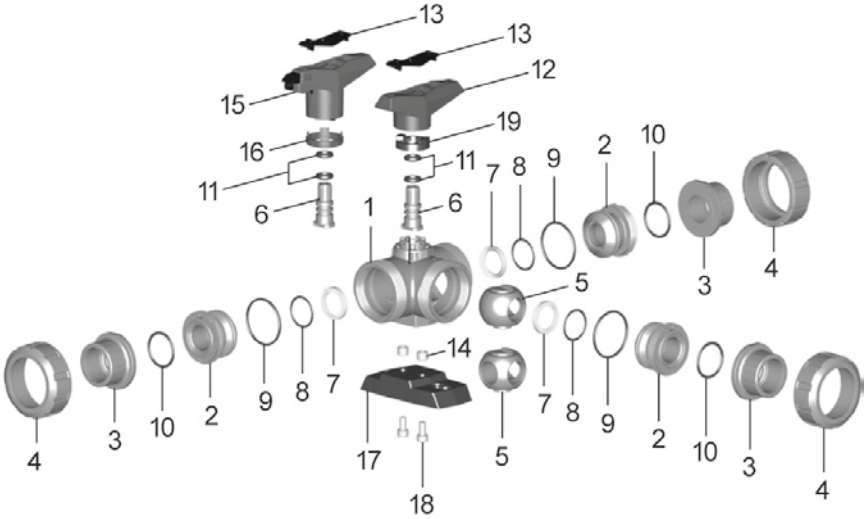

Central part for Ball valve type 543 Pro
L-port
Horizontal

Model:

- Ball seals standard in PTFE
- Central part consisting of: body, union bush, ball, stem, standard lever, stainless steel threaded inserts and seal for: ball, backing, body, face and stem
- Every connecting pieces and union nuts are listed on product range industry valves

d (mm)	Size (inch)	DN (mm)	PVC-U EPDM Code	PVC-U FKM Code	PVC-C EPDM Code	PVC-C FKM Code	ABS EPDM Code
16	⅜	10	**161 488 002**	**161 488 012**	**163 481 902**	**163 481 912**	**169 481 202**
20	½	15	**161 488 002**	**161 488 012**	**163 481 902**	**163 481 912**	**169 481 202**
25	¾	20	**161 488 003**	**161 488 013**	**163 481 903**	**163 481 913**	**169 481 203**
32	1	25	**161 488 004**	**161 488 014**	**163 481 904**	**163 481 914**	**169 481 204**
40	1 ¼	32	**161 488 005**	**161 488 015**	**163 481 905**	**163 481 915**	**169 481 205**
50	1 ½	40	**161 488 006**	**161 488 016**	**163 481 906**	**163 481 916**	**169 481 206**
63	2	50	**161 488 007**	**161 488 017**	**163 481 907**	**163 481 917**	**169 481 207**

d (mm)	Size (inch)	DN (mm)	PP-H EPDM Code	PP-H FKM Code	PVDF FKM Code
16	⅜	10	**167 484 802**	**167 484 812**	**175 483 602**
20	½	15	**167 484 802**	**167 484 812**	**175 483 602**
25	¾	20	**167 484 803**	**167 484 813**	**175 483 603**

table continued on the next page

d (mm)	Size (inch)	DN (mm)	PP-H EPDM Code	PP-H FKM Code	PVDF FKM Code
32	1	25	**167 484 804**	**167 484 814**	**175 483 604**
40	1 ¼	32	**167 484 805**	**167 484 815**	**175 483 605**
50	1 ½	40	**167 484 806**	**167 484 816**	**175 483 606**
63	2	50	**167 484 807**	**167 484 817**	**175 483 607**

Central part for Ball valve type 543 Pro
T-port
Horizontal

Model:

- Ball seals standard in PTFE
- Central part consisting of: body, union bush, ball, stem, standard lever, stainless steel threaded inserts and seal for: ball, backing, body, face and stem

d (mm)	Size (inch)	DN (mm)	PVC-U EPDM Code	PVC-U FKM Code	PVC-C EPDM Code	PVC-C FKM Code	ABS EPDM Code
16	⅜	10	**161 488 022**	**161 488 032**	**163 481 922**	**163 481 932**	**169 481 212**
20	½	15	**161 488 022**	**161 488 032**	**163 481 922**	**163 481 932**	**169 481 212**
25	¾	20	**161 488 023**	**161 488 033**	**163 481 923**	**163 481 933**	**169 481 213**
32	1	25	**161 488 024**	**161 488 034**	**163 481 924**	**163 481 934**	**169 481 214**
40	1 ¼	32	**161 488 025**	**161 488 035**	**163 481 925**	**163 481 935**	**169 481 215**
50	1 ½	40	**161 488 026**	**161 488 036**	**163 481 926**	**163 481 936**	**169 481 216**
63	2	50	**161 488 027**	**161 488 037**	**163 481 927**	**163 481 937**	**169 481 217**

d (mm)	Size (inch)	DN (mm)	PP-H EPDM Code	PP-H FKM Code	PVDF FKM Code
16	⅜	10	**167 484 822**	**167 484 832**	**175 483 612**
20	½	15	**167 484 822**	**167 484 832**	**175 483 612**
25	¾	20	**167 484 823**	**167 484 833**	**175 483 613**
32	1	25	**167 484 824**	**167 484 834**	**175 483 614**
40	1 ¼	32	**167 484 825**	**167 484 835**	**175 483 615**
50	1 ½	40	**167 484 826**	**167 484 836**	**175 483 616**
63	2	50	**167 484 827**	**167 484 837**	**175 483 617**

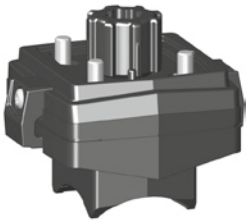

Assembly kit

Model:

- Intermediate element for ball valve type 543 horizontal and electric or pneumatic actuators EA21; PA11/21
- Including screws and position indicator for actuators

d (mm)	Inch (inch)	DN (mm)	Code
16 - 20	⅜ - ½	10 - 15	**167 484 941**
25 - 32	¾ - 1	20 - 25	**167 484 942**
40 - 50	1 ¼ - 1 ½	32 - 40	**167 484 943**
63	2	50	**167 484 944**

Turn limiter 90°

d (mm)	Size (inch)	DN (mm)	Code
16	⅜	10	**167 482 479**
20	½	15	**167 482 479**
25	¾	20	**167 482 480**

table continued on the next page

d (mm)	Size (inch)	DN (mm)	Code
32	1	25	**167 482 480**
40	1 ¼	32	**167 482 481**
50	1 ½	40	**167 482 481**
63	2	50	**167 482 482**

Face seal

Model:

- Face seal no. 10

d (mm)	Size (inch)	DN (mm)	EPDM Code	FKM Code
16	⅜	10	**748 410 059**	**749 410 059**
20	½	15	**748 410 059**	**749 410 059**
25	¾	20	**748 410 106**	**749 410 106**
32	1	25	**748 410 151**	**749 410 151**
40	1 ¼	32	**748 410 062**	**749 410 062**
50	1 ½	40	**748 410 003**	**749 410 003**
63	2	50	**748 410 231**	**749 410 231**
75	2 ½	65	**748 410 119**	**749 410 119**
90	3	80	**748 410 023**	**749 410 023**
110	4	100	**748 410 254**	**749 410 254**

Lever

d (mm)	Size (inch)	DN (mm)
16	⅜	10
20	½	15
25	¾	20
32	1	25
40	1 ¼	32
50	1 ½	40
63	2	50

d (mm)	Standard lever L-port red Code	Standard lever L-port black Code	Standard lever T-port red Code	Standard lever T-port black Code	Multifunctional-lever L-port red Code
16	**167 484 488**	**167 484 376**	**167 484 588**	**167 484 576**	**167 484 442**
20	**167 484 488**	**167 484 376**	**167 484 588**	**167 484 576**	**167 484 442**
25	**167 484 489**	**167 484 377**	**167 484 589**	**167 484 577**	**167 484 443**
32	**167 484 490**	**167 484 378**	**167 484 590**	**167 484 578**	**167 484 444**
40	**167 484 491**	**167 484 379**	**167 484 591**	**167 484 579**	**167 484 445**
50	**167 484 492**	**167 484 380**	**167 484 592**	**167 484 580**	**167 484 446**
63	**167 484 493**	**167 484 381**	**167 484 593**	**167 484 581**	**167 484 447**

d (mm)	Multifunctional-lever T-port red Code
16	**167 484 542**
20	**167 484 542**
25	**167 484 543**
32	**167 484 544**
40	**167 484 545**
50	**167 484 546**
63	**167 484 547**

Ball set L-port

Model:

- Ball set consisting of: lever (12), ball (5), stem (6), ball-, backing-, body- and stem seal (7-9,11)
- Ball seals standard in PTFE

d (mm)	Size (inch)	DN (mm)
16	⅜	10
20	½	15
25	¾	20
32	1	25
40	1 ¼	32
50	1 ½	40
63	2	50

d (mm)	PVC-U EPDM Code	PVC-U FKM Code	PVC-C EPDM Code	PVC-C FKM Code	ABS EPDM Code	PP-H EPDM Code
16	**161 488 162**	**161 488 172**	**163 481 982**	**163 481 992**	**169 481 282**	**167 484 882**
20	**161 488 162**	**161 488 172**	**163 481 982**	**163 481 992**	**169 481 282**	**167 484 882**
25	**161 488 163**	**161 488 173**	**163 481 983**	**163 481 993**	**169 481 283**	**167 484 883**
32	**161 488 164**	**161 488 174**	**163 481 984**	**163 481 994**	**169 481 284**	**167 484 884**
40	**161 488 165**	**161 488 175**	**163 481 985**	**163 481 995**	**169 481 285**	**167 484 885**
50	**161 488 166**	**161 488 176**	**163 481 986**	**163 481 996**	**169 481 286**	**167 484 886**
63	**161 488 167**	**161 488 177**	**163 481 987**	**163 481 997**	**169 481 287**	**167 484 887**

d (mm)	PP-H FKM Code	PVDF FKM Code
16	**167 484 892**	**175 483 642**
20	**167 484 892**	**175 483 642**
25	**167 484 893**	**175 483 643**
32	**167 484 894**	**175 483 644**
40	**167 484 895**	**175 483 645**
50	**167 484 896**	**175 483 646**
63	**167 484 897**	**175 483 647**

Spare parts ball valve type 370

Lever

d-d (mm)	Inch (inch)	DN-DN (mm)	PVC-U orange Code	PVC-U black Code
- - 75	2 ½	- - 65	**161 480 763**	**161 481 260**
- - 90	3	- - 80	**161 480 764**	**161 481 261**
110 - 160	4 - 6	100 - 150	**161 480 420**	**161 481 262**

Seal set

Model:

- Seal set consisting of: backing-, body- and stem seal (3-5)

d-d (mm)	Inch (inch)	DN-DN (mm)	EPDM Code	FKM Code
- - 75	2 ½	- - 65		**161 482 974**
- - 90	3	- - 80	**161 482 969**	**161 482 975**
110 - 160	4 - 6	100 - 150	**161 482 970**	**161 482 976**

Face seal

Model:

- Face seal no. 9

d (mm)	Size (inch)	DN (mm)	EPDM Code	FKM Code
75	2 ½	65	**748 410 119**	**749 410 119**
90	3	80	**748 410 112**	**749 410 112**
110	4	100	**748 410 099**	**749 410 099**

Spare parts ball valve type 343 horizontal

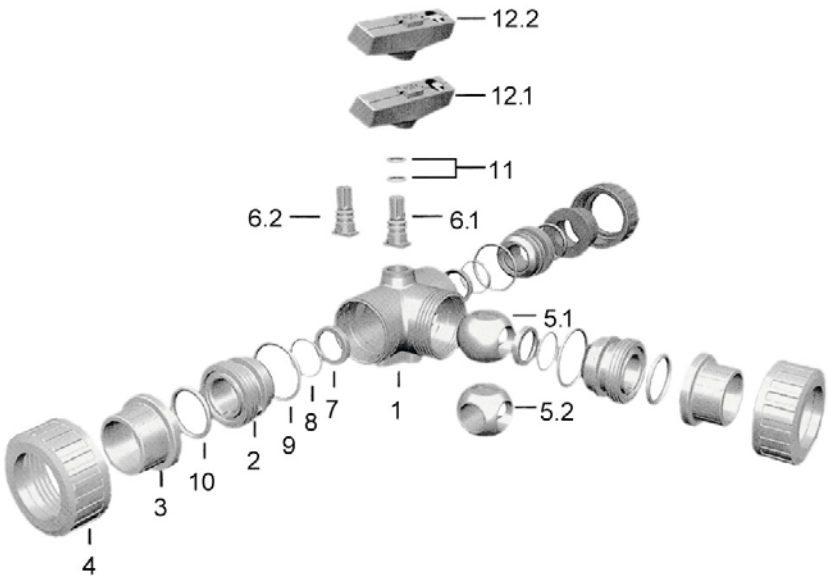

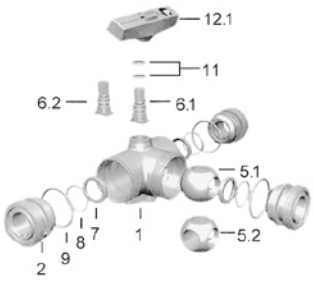

Central part T-port

Model:

- Central part consisting of: lever (12.1), body (1), union bush (2), ball (5.2), stem (6.2), ball-, backing-, body- and stem seal (7-9,11)
- Ball seals standard in PTFE

d (mm)	Size (inch)	DN (mm)
16	⅜	10
20	½	15
25	¾	20

table continued on the next page

d (mm)	Size (inch)	DN (mm)
32	1	25
40	1 ¼	32
50	1 ½	40
63	2	50

d (mm)	PVC-U EPDM Code	PVC-U FKM Code	PVC-C EPDM Code	PVC-C FKM Code	ABS EPDM Code	PP-H EPDM Code
16	161 490 461	161 490 472	163 480 935	163 480 946	169 480 490	167 482 159
20	161 490 461	161 490 472	163 480 935	163 480 946	169 480 490	167 482 159
25	161 490 462	161 490 473	163 480 936	163 480 947	169 480 491	167 482 160
32	161 490 463	161 490 474	163 480 937	163 480 948	169 480 492	167 482 161
40	161 490 464	161 490 475	163 480 938	163 480 949	169 480 493	167 482 162
50	161 490 465	161 490 476	163 480 939	163 480 950	169 480 494	167 482 163
63	161 490 466	161 490 477	163 480 940	163 480 951	169 480 495	167 482 164

d (mm)	PP-H FKM Code	PVDF FKM Code
16	167 482 170	175 482 620
20	167 482 170	175 482 620
25	167 482 171	175 482 621
32	167 482 172	175 482 622
40	167 482 173	175 482 623
50	167 482 174	175 482 624
63	167 482 175	175 482 625

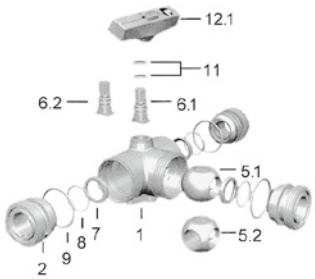

Central part L-port

Model:

- Ball seals standard in PTFE
- Central part consisting of: lever (12.1), body (1), union bush (2), ball (5.1), stem (6.1), ball-, backing-, body- and stem seal (7-9,11)

d (mm)	Size (inch)	DN (mm)
16	⅜	10
20	½	15
25	¾	20
32	1	25
40	1 ¼	32
50	1 ½	40
63	2	50

d (mm)	PVC-U EPDM Code	PVC-U FKM Code	PVC-C EPDM Code	PVC-C FKM Code	ABS EPDM Code	PP-H EPDM Code
16	161 490 439	161 490 450	163 480 913	163 480 924	169 480 468	167 482 137
20	161 490 439	161 490 450	163 480 913	163 480 924	169 480 468	167 482 137
25	161 490 440	161 490 451	163 480 914	163 480 925	169 480 469	167 482 138
32	161 490 441	161 490 452	163 480 915	163 480 926	169 480 470	167 482 139
40	161 490 442	161 490 453	163 480 916	163 480 927	169 480 471	167 482 140
50	161 490 443	161 490 454	163 480 917	163 480 928	169 480 472	167 482 141
63	161 490 444	161 490 455	163 480 918	163 480 929	169 480 473	167 482 142

d (mm)	PP-H FKM Code	PVDF FKM Code
16	167 482 148	175 482 593
20	167 482 148	175 482 593
25	167 482 149	175 482 594

table continued on the next page

d (mm)	PP-H FKM Code	PVDF FKM Code
32	167 482 150	175 482 595
40	167 482 151	175 482 596
50	167 482 152	175 482 597
63	167 482 153	175 482 598

Lever

d (mm)	Size (inch)	DN (mm)	L-port Code	T-port Code
16	⅜	10	161 482 151	161 486 175
20	½	15	161 482 151	161 486 175
25	¾	20	161 482 152	161 486 176
32	1	25	161 482 153	161 486 177
40	1 ¼	32	161 482 154	161 486 178
50	1 ½	40	161 482 155	161 486 179
63	2	50	161 482 156	161 486 180

Spare parts ball valve type 346

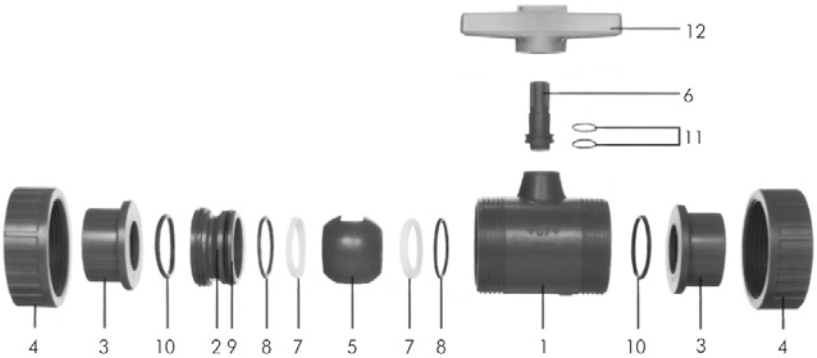

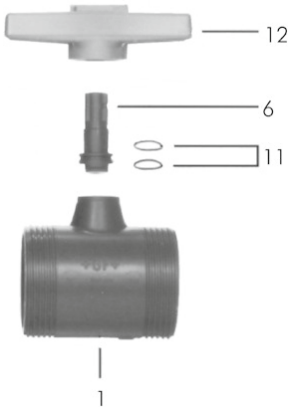

Central part

Model:

- Ball seals standard in PTFE
- Central part consisting of: lever red (12), body (1), union bush (2), ball (5), stem (6), ball-, backing-, body- and stem seal (7-9,11)

d (mm)	Size (inch)	DN (mm)
16	⅜	10
20	½	15
25	¾	20
32	1	25
40	1 ¼	32
50	1 ½	40
63	2	50

d (mm)	PVC-U EPDM Code	PVC-U FKM Code	PVC-C EPDM Code	PVC-C FKM Code	ABS EPDM Code	PP-H EPDM Code
16	161 483 930	161 483 940	163 480 620	163 480 630	169 480 301	167 480 806
20	161 483 931	161 483 941	163 480 621	163 480 631	169 480 301	167 480 807
25	161 483 932	161 483 942	163 480 622	163 480 632	169 480 302	167 480 808

table continued on the next page

d (mm)	PVC-U EPDM Code	PVC-U FKM Code	PVC-C EPDM Code	PVC-C FKM Code	ABS EPDM Code	PP-H EPDM Code
32	161 483 933	161 483 943	163 480 623	163 480 633	169 480 303	167 480 809
40	161 483 934	161 483 944	163 480 624	163 480 634	169 480 304	167 480 810
50	161 483 935	161 483 945	163 480 625	163 480 635	169 480 305	167 480 811
63	161 483 936	161 483 946	163 480 626	163 480 636	169 480 306	167 480 812

d (mm)	PP-H FKM Code	PVDF FKM Code
16	167 480 813	175 480 825
20	167 480 814	175 480 826
25	167 480 815	175 480 827
32	167 480 816	175 480 828
40	167 480 817	175 480 829
50	167 480 818	175 480 830
63	167 480 819	175 480 831

Lever

d (mm)	Size (inch)	DN (mm)	PVC-U orange Code	ASA black Code
16	⅜	10	161 480 725	160 480 115
20	½	15	161 480 725	160 480 115
25	¾	20	161 480 726	160 480 116
32	1	25	161 480 727	160 480 117
40	1 ¼	32	161 480 728	160 480 118
50	1 ½	40	161 480 729	160 480 119
63	2	50	161 480 730	160 480 120

Face seal

Model:

- Face seal no. 10

d (mm)	Size (inch)	DN (mm)	EPDM Code	FKM Code
16	⅜	10	748 410 042	749 410 042
20	½	15	748 410 042	749 410 042
25	¾	20	748 410 116	749 410 116
32	1	25	748 410 103	749 410 103
40	1 ¼	32	748 410 027	749 410 027
50	1 ½	40	748 410 010	749 410 010
63	2	50	748 410 011	749 410 011

Spare parts ball valve type 546

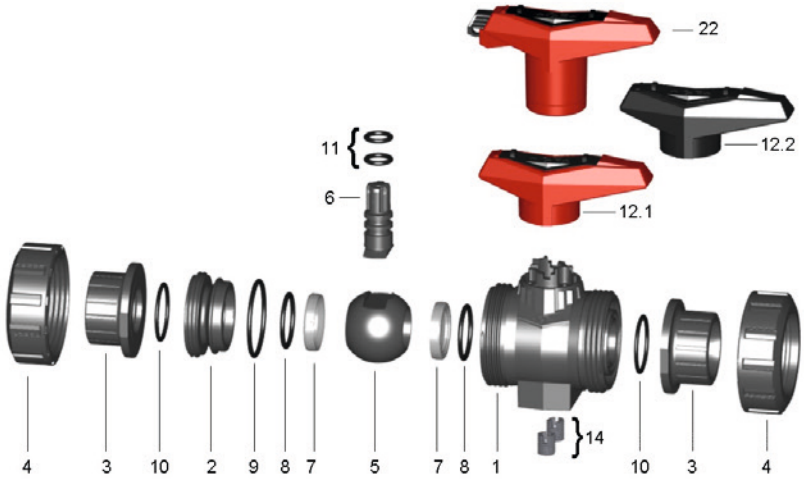

Central part

Model:

- Every connecting pieces and union nuts are listed on product range industry valves
- Ball seals standard in PTFE
- Central part consisting of: body (1), union bush (2), ball (5), stem (6), ball-, backing-, body-, face- and stem seal (7-11), standard lever (12) and threaded inserts stainless steel (14)

d (mm)	Size (inch)	DN (mm)	PVC-U EPDM Code	PVC-U FKM Code	PVC-C EPDM Code	PVC-C FKM Code	ABS EPDM Code
16	⅜	10	**161 486 151**	**161 486 163**	**163 481 251**	**163 481 263**	**169 480 751**
20	½	15	**161 486 151**	**161 486 163**	**163 481 251**	**163 481 263**	**169 480 751**
25	¾	20	**161 486 152**	**161 486 164**	**163 481 252**	**163 481 264**	**169 480 752**
32	1	25	**161 486 153**	**161 486 165**	**163 481 253**	**163 481 265**	**169 480 753**
40	1 ¼	32	**161 486 154**	**161 486 166**	**163 481 254**	**163 481 266**	**169 480 754**
50	1 ½	40	**161 486 155**	**161 486 167**	**163 481 255**	**163 481 267**	**169 480 755**
63	2	50	**161 486 156**	**161 486 168**	**163 481 256**	**163 481 268**	**169 480 756**
75	2 ½	65	**161 486 157**	**161 486 169**	**163 481 257**	**163 481 269**	**169 480 757**
90	3	80	**161 486 158**	**161 486 170**	**163 481 258**	**163 481 270**	**169 480 758**
110	4	100	**161 486 159**	**161 486 171**	**163 481 259**	**163 481 271**	**169 480 759**

d (mm)	Size (inch)	DN (mm)	PP-H EPDM Code	PP-H FKM Code	PVDF FKM Code
16	⅜	10	**167 482 876**	**167 482 888**	**175 482 963**
20	½	15	**167 482 876**	**167 482 888**	**175 482 963**
25	¾	20	**167 482 877**	**167 482 889**	**175 482 964**
32	1	25	**167 482 878**	**167 482 890**	**175 482 965**
40	1 ¼	32	**167 482 879**	**167 482 891**	**175 482 966**
50	1 ½	40	**167 482 880**	**167 482 892**	**175 482 967**
63	2	50	**167 482 881**	**167 482 893**	**175 482 968**
75	2 ½	65	**167 482 882**	**167 482 894**	**175 482 969**
90	3	80	**167 482 883**	**167 482 895**	**175 482 970**
110	4	100	**167 482 884**	**167 482 896**	**175 482 971**

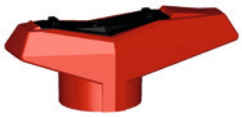

DN10/15 - 50

DN10/15 - 50

Lever 546

d (mm)	Size (inch)	DN (mm)	Standard lever red Code	Standard lever black Code	Multifunctional lever Code
16	⅜	10	**167 484 088**	**167 484 076**	**167 484 100**
20	½	15	**167 484 088**	**167 484 076**	**167 484 100**
25	¾	20	**167 484 089**	**167 484 077**	**167 484 101**
32	1	25	**167 484 090**	**167 484 078**	**167 484 102**
40	1 ¼	32	**167 484 091**	**167 484 079**	**167 484 103**
50	1 ½	40	**167 484 092**	**167 484 080**	**167 484 104**
63	2	50	**167 484 093**	**167 484 081**	**167 484 105**
75	2 ½	65	**167 484 094**	**167 484 082**	**161 486 689**
90	3	80	**167 484 095**	**167 484 083**	**161 486 690**
110	4	100	**167 484 096**	**167 484 084**	**161 486 691**

Face seal

Model:

- Face seal no. 10

d (mm)	Size (inch)	DN (mm)	EPDM Code	FKM Code
16	⅜	10	**748 410 059**	**749 410 059**
20	½	15	**748 410 059**	**749 410 059**
25	¾	20	**748 410 106**	**749 410 106**
32	1	25	**748 410 151**	**749 410 151**
40	1 ¼	32	**748 410 062**	**749 410 062**
50	1 ½	40	**748 410 003**	**749 410 003**
63	2	50	**748 410 231**	**749 410 231**
75	2 ½	65	**748 410 119**	**749 410 119**
90	3	80	**748 410 023**	**749 410 023**
110	4	100	**748 410 254**	**749 410 254**

Seal set for ball valve 546 (Pro)

Model:

- Seal set consisting of: backing-, body-, face- and stem seal (8-11)

d (mm)	Size (inch)	DN (mm)	DN (mm)	EPDM Code	FKM Code	KALREZ Code
16 - 20	½	15	10 - 15	**161 486 400**	**161 486 410**	**161 488 280**
25	¾	20	20	**161 486 401**	**161 486 411**	**161 488 281**
32	1	25	25	**161 486 402**	**161 486 412**	**161 488 282**
40	1 ¼	32	32	**161 486 403**	**161 486 413**	**161 488 283**
50	1 ½	40	40	**161 486 404**	**161 486 414**	**161 488 284**
63	2	50	50	**161 486 405**	**161 486 415**	**161 488 285**
75	2 ½	65	65	**161 486 406**	**161 486 416**	
90	3	80	80	**161 486 407**	**161 486 417**	
110	4	100	100	**161 486 408**	**161 486 418**	

Ball set

Model:

- Ball seals standard in PTFE
- Ball set consisting of: ball (5), stem (6), ball-, backing-, body- and stem seal (7-9,11)

d (mm)	Size (inch)	DN (mm)	PVC-U EPDM Code	PVC-U FKM Code	PVC-C EPDM Code	PVC-C FKM Code	ABS EPDM Code
16	⅜	10	161 486 375	161 486 385	163 481 375	163 481 385	169 480 900
20	½	15	161 486 375	161 486 385	163 481 375	163 481 385	169 480 900
25	¾	20	161 486 376	161 486 386	163 481 376	163 481 386	169 480 901
32	1	25	161 486 377	161 486 387	163 481 377	163 481 387	169 480 902
40	1 ¼	32	161 486 378	161 486 388	163 481 378	163 481 388	169 480 903
50	1 ½	40	161 486 379	161 486 389	163 481 379	163 481 389	169 480 904
63	2	50	161 486 380	161 486 390	163 481 380	163 481 390	169 480 905
75	2 ½	65	161 486 381	161 486 391	163 481 381	163 481 391	169 480 906
90	3	80	161 486 382	161 486 392	163 481 382	163 481 392	169 480 907
110	4	100	161 486 383	161 486 393	163 481 383	163 481 393	169 480 908

d (mm)	Size (inch)	DN (mm)	PP-H EPDM Code	PP-H FKM Code	PVDF FKM Code
16	⅜	10	167 484 125	167 484 135	175 483 275
20	½	15	167 484 125	167 484 135	175 483 275
25	¾	20	167 484 126	167 484 136	175 483 276
32	1	25	167 484 127	167 484 137	175 483 277
40	1 ¼	32	167 484 128	167 484 138	175 483 278
50	1 ½	40	167 484 129	167 484 139	175 483 279
63	2	50	167 484 130	167 484 140	175 483 280
75	2 ½	65	167 484 131	167 484 141	175 483 281
90	3	80	167 484 132	167 484 142	175 483 282
110	4	100	167 484 133	167 484 143	175 483 283

Spare parts for valve body type 519

Valve body with butt fusion spigot

d (mm)	Size (inch)	PP-H Code	PP-Natur Code	PVDF HP Code	Weight (kg)
20 - 20	½	167 485 911	168 480 601	180 001 101	0.171
25 - 20	¾	167 485 912	168 480 602	180 001 102	0.236
25 - 25	¾	167 485 913	168 480 603	180 001 103	0.239
32 - 20	1	167 485 914	168 480 604	180 001 104	0.289
32 - 25	1	167 485 915	168 480 605	180 001 105	0.293
32 - 32	1	167 485 916	168 480 606	180 001 106	0.334
40 - 20	1 ¼	167 485 917	168 480 607	180 001 107	0.388
40 - 25	1 ¼			180 001 108	0.392
40 - 32	1 ¼			180 001 109	0.410
40 - 40	1 ¼			180 001 110	0.439
50 - 20	1 ½	167 485 922	168 480 611	180 001 111	0.408
50 - 25	1 ½	167 485 923	168 480 612	180 001 112	0.478
50 - 32	1 ½	167 485 924	168 480 613	180 001 113	0.483
50 - 40	1 ½			180 001 114	1.101
50 - 50	1 ½			180 001 115	1.111
63 - 20	2	167 485 927	168 480 616	180 001 116	0.485
63 - 25	2	167 485 928	168 480 617	180 001 117	0.563
63 - 32	2	167 485 929	168 480 618	180 001 118	0.569
63 - 40	2			180 001 119	1.278
63 - 50	2			180 001 120	1.343
63 - 63	2			180 001 121	1.356
90 - 25	3			180 001 126	0.855
90 - 32	3			180 001 127	0.871
90 - 50	3			180 001 128	1.796

table continued on the next page

d (mm)	Size (inch)	PP-H Code	PP-Natur Code	PVDF HP Code	Weight (kg)
90 - 63	3			**180 001 129**	1.824
110 - 20	4			**180 001 130**	1.118
110 - 25	4			**180 001 131**	1.124
110 - 32	4			**180 001 132**	1.141
110 - 50	4			**180 001 133**	2.212
110 - 63	4			**180 001 134**	2.242

Spare parts for valve body type 515

Valve body with spigot ends

d (mm)	DN (mm)	Size (inch)	PVC-U solvent cement spigot Code	Weight (kg)
20	15	½	**161 492 072**	0.115
25	20	¾	**161 492 073**	0.183
32	25	1	**161 492 074**	0.246
40	32	1 ¼	**161 492 075**	0.379
50	40	1 ½	**161 492 076**	0.602
63	50	2	**161 492 077**	1.055

d (mm)	PVC-C solvent cement spigot Code	ABS solvent cement spigot Code	PP-H socket fusion spigot Code	PP-H butt fusion spigot IR Code	PP-N butt fusion spigot IR Code	PVDF socket fusion spigot Code
20	**163 482 062**	**169 481 862**	**167 483 342**	**167 483 882**	**168 480 462**	**175 483 692**
25	**163 482 063**	**169 481 863**	**167 483 343**	**167 483 883**	**168 480 463**	**175 483 693**
32	**163 482 064**	**169 481 864**	**167 483 344**	**167 483 884**	**168 480 464**	**175 483 694**
40	**163 482 065**	**169 481 865**	**167 483 345**	**167 483 885**	**168 480 465**	**175 483 695**
50	**163 482 066**	**169 481 866**	**167 483 346**	**167 483 886**	**168 480 466**	**175 483 696**
63	**163 482 067**	**169 481 867**	**167 483 347**	**167 483 887**	**168 480 467**	**175 483 697**

d (mm)	PVDF butt fusion spigot IR Code	PVDF HP butt fusion spigot IR Code
20	**175 483 742**	**180 001 012**
25	**175 483 743**	**180 001 013**
32	**175 483 744**	**180 001 014**
40	**175 483 745**	**180 001 015**
50	**175 483 746**	**180 001 016**
63	**175 483 747**	**180 001 017**

Mounting Tool type 604/605

Model:

- Hook wrench for easy opening & maintenance

Code	Weight (kg)
700 278 354	0.41

Spare parts for automatic valves

Diastar Six/Ten/Sixteen

Actuators

d (mm)	Size (inch)	DN (mm)
20	½	15
25	¾	20
32	1	25
40	1 ¼	32
50	1 ½	40
63	2	50

d (mm)	DIASTAR Six FC Code	DIASTAR Ten FC Code	Diastar Ten + FC Code	Diastar Sixteen FC Code	Diastar Ten FO Code	Diastar Ten DA Code
20	**198 151 762**	**198 151 772**	**198 153 062**	**198 151 782**	**198 151 792**	**198 151 802**
25	**198 151 763**	**198 151 773**	**198 153 063**	**198 151 783**	**198 151 793**	**198 151 803**
32	**198 151 764**	**198 151 774**	**198 153 064**	**198 151 784**	**198 151 794**	**198 151 804**
40	**198 151 765**	**198 151 775**	**198 153 065**	**198 151 785**	**198 151 795**	**198 151 805**
50	**198 151 766**	**198 151 776**	**198 153 066**	**198 151 786**	**198 151 796**	**198 151 806**
63	**198 151 767**	**198 151 777**	**198 153 067**	**198 151 787**	**198 151 797**	**198 151 807**

Indicator cap

Size (mm)	Code
1-2	**198 806 773**
3-5	**198 806 774**

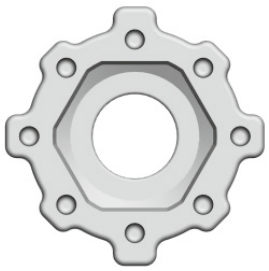

Compressor set

Model:

- Incl. diaphragm holder

d (mm)	Inch (inch)	DN (mm)	Code
20	1/2	15	**198 000 872**
25	3/4	20	**198 000 873**
32	1	25	**198 000 874**
40	1 1/4	32	**198 000 875**
50	1 1/2	40	**198 000 876**
63	2	50	**198 000 877**

Seal set for DIASTAR Ten

Model:

- Spindle seal and piston seal

DN (mm)	Diastar Ten Code
15	**198 000 881**
20/25	**198 000 882**
32	**198 000 883**
40/50	**198 000 884**

Spare parts for hand-operated valves Type 514/515/517/519

Bonnet complete

Model:

- Incl. compressor
- Diaphragm is not included

d (mm)	Size (inch)	DN (mm)	Standard configuration PN10 Code	For pressure tight housing PN10 Code	Standard configuration PN16 Code	For pressure tight housing PN16 Code
20	½	15	**198 151 742**	**198 151 752**	**198 151 842**	**198 151 852**
25	¾	20	**198 151 743**	**198 151 753**	**198 151 843**	**198 151 853**
32	1	25	**198 151 744**	**198 151 754**	**198 151 844**	**198 151 854**
40	1 ¼	32	**198 151 745**	**198 151 755**	**198 151 845**	**198 151 855**
50	1 ½	40	**198 151 746**	**198 151 756**	**198 151 846**	**198 151 856**
63	2	50	**198 151 747**	**198 151 757**	**198 151 847**	**198 151 857**

Spindle assembly

Model:

- Incl. compressor
- Position indicator is not included

DN-DN (mm)	Code
15 - 20	**198 204 327**
25 - 32	**198 204 328**
40 - 50	**198 204 329**

Position indicator

d (mm)	Size (inch)	DN (mm)	Code
20	½	15	**167 484 992**
25	¾	20	**167 484 993**
32	1	25	**167 484 994**
40	1 ¼	32	**167 484 995**
50	1 ½	40	**167 484 996**
63	2	50	**167 484 997**

Hand wheel

Model:

- Without position indicator

DN (mm)	Code
15 - 20	**198 204 162**
25 - 32	**198 204 164**
40 - 50	**198 104 166**

Seal set

Model:

- For manual valve - pressure tight housing
- Incl. position indicator

d (mm)	Size (inch)	DN (mm)	EPDM Code
20	½	15	**198 000 892**
25	¾	20	**198 000 893**
32	1	25	**198 000 894**
40	1 ¼	32	**198 000 895**
50	1 ½	40	**198 000 896**
63	2	50	**198 000 897**

Spare parts for valve body type 514

O-ring

d (mm)	Size (inch)	DN (mm)	EPDM Code	FKM Code	FKM for PVDF standard Code	FKM for PVDF-HP Code
20	½	15	**748 410 006**	**749 410 006**	**749 410 005**	**749 411 005**
25	¾	20	**748 410 007**	**749 410 007**	**749 410 006**	**749 411 006**
32	1	25	**748 410 008**	**749 410 008**	**749 410 120**	**749 411 120**
40	1 ¼	32	**748 410 009**	**749 410 009**	**749 410 062**	**749 411 062**
50	1 ½	40	**748 410 010**	**749 410 010**	**749 410 172**	**749 411 172**
63	2	50	**748 410 011**	**749 410 011**	**749 410 054**	**749 411 054**

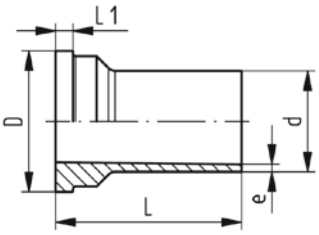

SYGEF Standard Union end SDR21/PN16

Model:

- Material: PVDF

d (mm)	FM	PVDF Code	D (mm)	L (mm)	L1 (mm)	e (mm)
20	BCF, IR	**735 608 606**	30	53	5	1.9
25	BCF, IR	**735 608 607**	39	56	5	1.9
32	BCF, IR	**735 608 608**	45	59	6	2.4
40	BCF, IR	**735 608 609**	57	62	6	2.4
50	BCF, IR	**735 608 610**	63	65	7	3.0
63	BCF, IR	**735 608 611**	78	68	8	3.0
75	BCF, IR	**735 608 612**	101	66	9	3.6
90	BCF, IR	**735 608 613**	101	65	9	4.3
110	BCF, IR	**735 608 614**	121	65	10	5.3

Union end PVC-U Rc
for diaphragm valves type 514/DIASTAR, pressure regulating valves type 582/586 and variable
area flow meters type 123/335/350 (6)

DN (mm)	d (mm)	Size (inch)	PVC-U Rc Code
15	20	½	**721 605 606**
20	25	¾	**721 605 607**
25	32	1	**721 605 608**
32	40	1 ¼	**721 605 609**
40	50	1 ½	**721 605 610**
50	63	2	**721 605 611**

Valve body with true union

Model:

- Without connection parts

d (mm)	Size (inch)	DN (mm)	PVC-U Code	PVC-C Code	ABS Code	PP-H Code	PVDF Code
20	½	15	**161 492 062**	**163 482 052**	**169 481 322**	**167 483 522**	**175 483 682**
25	¾	20	**161 492 063**	**163 482 053**	**169 481 323**	**167 483 523**	**175 483 683**
32	1	25	**161 492 064**	**163 482 054**	**169 481 334**	**167 483 524**	**175 483 684**
40	1 ¼	32	**161 492 065**	**163 482 055**	**169 481 325**	**167 483 525**	**175 483 685**
50	1 ½	40	**161 492 066**	**163 482 056**	**169 481 326**	**167 483 526**	**175 483 686**
63	2	50	**161 492 067**	**163 482 057**	**169 481 327**	**167 483 527**	**175 483 687**

d (mm)	Size (inch)	DN (mm)	PVDF HP Code
20	½	15	**180 001 002**
25	¾	20	**180 001 003**
32	1	25	**180 001 004**
40	1 ¼	32	**180 001 005**
50	1 ½	40	**180 001 006**
63	2	50	**180 001 007**

Special wrench for DV

d (mm)	DN (mm)	Code
20	15	**198 154 012**
25	20	**198 154 013**
32	25	**198 154 014**
40	32	**198 154 015**
50	40	**198 154 016**
63	50	**198 154 017**

Spare parts diaphragm
For 5 series

Model:

- For type 514, 515, 517, 519 and Diastar

d (mm)	Size (inch)	DN (mm)
20	½	15
25	¾	20
32	1	25
40	1 ¼	32
50	1 ½	40
63	2	50

d (mm)	NBR Code	EPDM Code	FKM Code	PTFE/EPDM Code	PTFE/EPDM HP Code	PTFE/FKM Code
20	**745 500 012**	**748 500 012**	**749 500 012**	**747 502 012**	**747 502 032**	**747 503 012**
25	**745 500 013**	**748 500 013**	**749 500 013**	**747 502 013**	**747 502 033**	**747 503 013**
32	**745 500 014**	**748 500 014**	**749 500 014**	**747 502 014**	**747 502 034**	**747 503 014**
40	**745 500 015**	**748 500 015**	**749 500 015**	**747 502 015**	**747 502 035**	**747 503 015**
50	**745 500 016**	**748 500 016**	**749 500 016**	**747 502 016**	**747 502 036**	**747 503 016**
63	**745 500 017**	**748 500 017**	**749 500 017**	**747 502 017**	**747 502 037**	**747 503 017**

Spare parts for valve body type 517
Flat gasket

d (mm)	Size (inch)	DN (mm)	EPDM Code	FKM Code
20	½	15	**748 400 006**	**749 400 006**
25	¾	20	**748 400 007**	**749 400 007**
32	1	25	**748 400 008**	**749 400 008**
40	1 ¼	32	**748 400 009**	**749 400 009**
50	1 ½	40	**748 400 010**	**749 400 010**
63	2	50	**748 400 011**	**749 400 011**

Spare parts diaphragm valve type 314

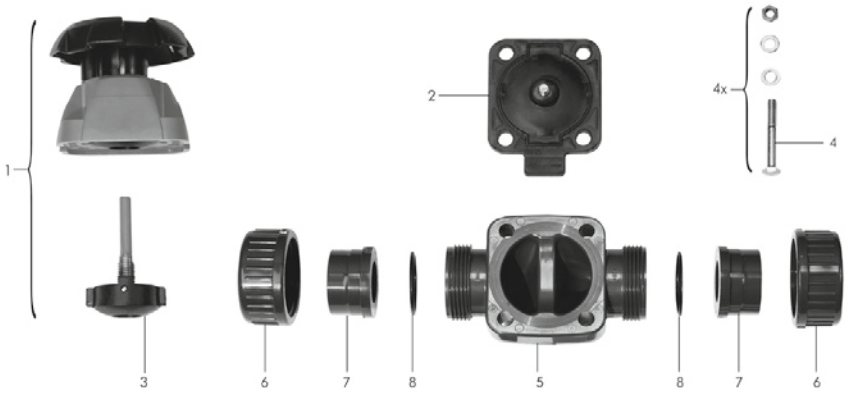

Bonnet complete

Model:

- Without diaphragm (1, 3)

d (mm)	Size (inch)	DN (mm)	elastomer diaphragm Code	PTFE diaphragm Code
20	½	15	**161 484 625**	**161 484 632**
25	¾	20	**161 484 626**	**161 484 633**
32	1	25	**161 484 627**	**161 484 634**
40	1 ¼	32	**161 484 628**	**161 484 635**
50	1 ½	40	**161 484 629**	**161 484 636**
63	2	50	**161 484 630**	**161 484 637**

Union end seal for PP-H and PVDF valves

d (mm)	Size (inch)	DN (mm)	EPDM Code	FKM Code
20	½	15	**748 410 006**	**749 410 006**
25	¾	20	**748 410 007**	**749 410 007**
32	1	25	**748 410 008**	**749 410 008**
40	1 ¼	32	**748 410 009**	**749 410 009**
50	1 ½	40	**748 410 010**	**749 410 010**
63	2	50	**748 410 011**	**749 410 011**

Union end seal for PVC-U valves

d (mm)	Size (inch)	DN (mm)	EPDM Code	FKM Code
20	½	15	**748 410 038**	**749 410 038**
25	¾	20	**748 410 044**	**749 410 044**
32	1	25	**748 410 195**	**749 410 195**
40	1 ¼	32	**748 410 052**	**749 410 052**
50	1 ½	40	**748 410 134**	**749 410 134**
63	2	50	**748 410 135**	**749 410 135**

Fastening set (4)

Model:

- * with support plate

d (mm)	Size (inch)	DN (mm)	for PVC-U PVC-C ABS Code	for PP PVDF * Code
20	½	15	**161 484 704**	**198 000 650**
25	¾	20	**161 484 705**	**198 000 651**
32	1	25	**161 484 706**	**198 000 652**
40	1 ¼	32	**161 484 707**	**198 000 653**
50	1 ½	40	**161 484 708**	**198 000 654**
63	2	50	**161 484 709**	**198 000 655**

Diaphragm (2)

d (mm)	Size (inch)	DN (mm)
20	½	15
25	¾	20
32	1	25
40	1 ¼	32
50	1 ½	40
63	2	50

d (mm)	NBR Code	EPDM Code	FKM Code	PTFE/EPDM Code	PTFE/FKM Code	CSM Code
20	**161 311 710**	**161 481 022**	**161 481 092**	**161 311 698**	**161 481 926**	**161 311 728**
25	**161 311 711**	**161 481 023**	**161 481 093**	**161 311 699**	**161 481 927**	**161 311 729**
32	**161 311 712**	**161 481 024**	**161 481 094**	**161 311 700**	**161 481 928**	**161 311 730**
40	**161 311 713**	**161 481 025**	**161 481 095**	**161 311 701**	**161 481 929**	**161 311 731**
50	**161 311 714**	**161 481 026**	**161 481 096**	**161 311 702**	**161 481 930**	**161 311 732**
63	**161 311 715**	**161 481 027**	**161 481 097**	**161 311 703**	**161 481 931**	**161 311 733**

d (mm)	PTFE/EPDM SYGEF PLUS HP Code
20	**161 484 452**
25	**161 484 453**
32	**161 484 454**
40	**161 484 455**
50	**161 484 456**
63	**161 484 457**

Spare parts diaphragm valve type 315

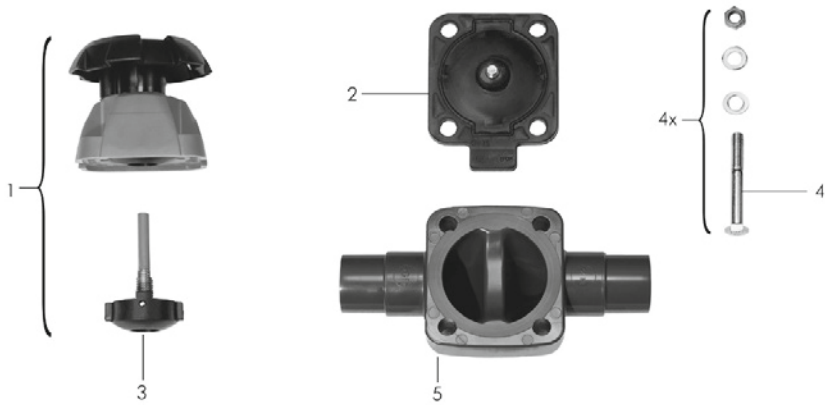

Bonnet complete

Model:

- Without diaphragm (1, 3)

d (mm)	Size (inch)	DN (mm)	elastomer diaphragm Code	PTFE diaphragm Code
20	½	15	**161 484 625**	**161 484 632**
25	¾	20	**161 484 626**	**161 484 633**
32	1	25	**161 484 627**	**161 484 634**
40	1 ¼	32	**161 484 628**	**161 484 635**
50	1 ½	40	**161 484 629**	**161 484 636**
63	2	50	**161 484 630**	**161 484 637**

Diaphragm (2)

d (mm)	Size (inch)	DN (mm)
20	½	15
25	⅜	20
32	1	25
40	1 ¼	32
50	1 ½	40
63	2	50

d (mm)	NBR Code	EPDM Code	FKM Code	PTFE/EPDM Code	PTFE/FKM Code	CSM Code
20	161 311 710	161 481 022	161 481 092	161 311 698	161 481 926	161 311 728
25	161 311 711	161 481 023	161 481 093	161 311 699	161 481 927	161 311 729
32	161 311 712	161 481 024	161 481 094	161 311 700	161 481 928	161 311 730
40	161 311 713	161 481 025	161 481 095	161 311 701	161 481 929	161 311 731
50	161 311 714	161 481 026	161 481 096	161 311 702	161 481 930	161 311 732
63	161 311 715	161 481 027	161 481 097	161 311 703	161 481 931	161 311 733

d (mm)	PTFE/EPDM SYGEF PLUS HP Code
20	161 484 452
25	161 484 453
32	161 484 454
40	161 484 455
50	161 484 456
63	161 484 457

Fastening set (4)

Model:

- * with support plate

d (mm)	Size (inch)	DN (mm)	for PVC-U PVC-C ABS Code	for PP PVDF * Code
20	½	15	161 484 704	198 000 650
25	¾	20	161 484 705	198 000 651
32	1	25	161 484 706	198 000 652
40	1 ¼	32	161 484 707	198 000 653
50	1 ½	40	161 484 708	198 000 654
63	2	50	161 484 709	198 000 655

Spare parts diaphragm valve type 317

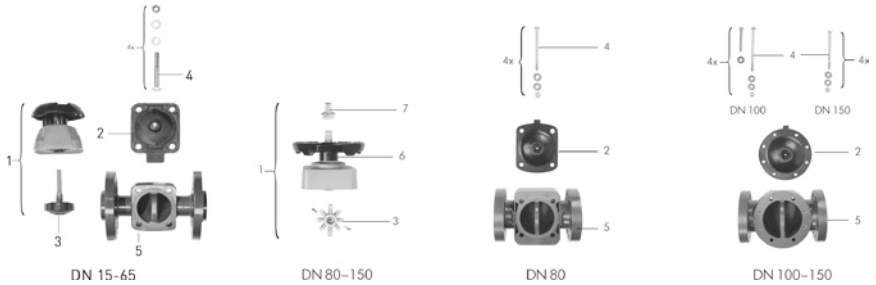

Bonnet complete

Model:

- Without diaphragm (1, 3)

d (mm)	Size (inch)	DN (mm)	elastomer diaphragm Code	PTFE diaphragm Code
20	½	15	**161 484 625**	**161 484 632**
25	¾	20	**161 484 626**	**161 484 633**
32	1	25	**161 484 627**	**161 484 634**
40	1 ¼	32	**161 484 628**	**161 484 635**
50	1 ½	40	**161 484 629**	**161 484 636**
63	2	50	**161 484 630**	**161 484 637**
75	2 ½	65	**161 484 631**	**161 484 638**
90	3	80	**161 482 514**	**161 482 516**
110	4	100	**161 482 515**	**161 482 517**
160	6	150	**161 482 901**	**161 482 906**

Diaphragm (2)

d (mm)	Size (inch)	DN (mm)
20	½	15
25	¾	20
32	1	25
40	1 ¼	32
50	1 ½	40
63	2	50
75	2 ½	65
90	3	80
110	4	100
160	6	150

d (mm)	NBR Code	EPDM Code	FKM Code	PTFE/EPDM Code	PTFE/FKM Code	PTFE/EPDM HP Code
20	**161 311 710**	**161 481 022**	**161 481 092**	**161 311 698**	**161 481 926**	**161 484 452**
25	**161 311 711**	**161 481 023**	**161 481 093**	**161 311 699**	**161 481 927**	**161 484 453**
32	**161 311 712**	**161 481 024**	**161 481 094**	**161 311 700**	**161 481 928**	**161 484 454**
40	**161 311 713**	**161 481 025**	**161 481 095**	**161 311 701**	**161 481 929**	**161 484 455**
50	**161 311 714**	**161 481 026**	**161 481 096**	**161 311 702**	**161 481 930**	**161 484 456**
63	**161 311 715**	**161 481 027**	**161 481 097**	**161 311 703**	**161 481 931**	**161 484 457**
75	**161 480 231**	**161 481 028**	**161 481 098**	**161 480 240**	**161 481 932**	**161 484 458**
90	**161 480 232**	**161 481 029**	**161 481 099**	**161 480 241**		**161 484 459**
110	**161 480 233**	**161 481 030**	**161 481 100**	**161 480 242**		**161 484 460**
160	**161 482 751**	**161 482 754**	**161 481 102**	**161 482 760**		**161 482 760**

d (mm)	CSM Code
20	**161 311 728**
25	**161 311 729**
32	**161 311 730**
40	**161 311 731**
50	**161 311 732**
63	**161 311 733**
75	**161 480 237**
90	**161 480 238**
110	**161 480 239**
160	**161 482 757**

Fastening set (4)

Model:

- * with support plate

d (mm)	Size (inch)	DN (mm)	for PVC-U PVC-C ABS Code	for PP PVDF * Code
20	½	15	**161 484 704**	**198 000 650**
25	¾	20	**161 484 705**	**198 000 651**
32	1	25	**161 484 706**	**198 000 652**
40	1 ¼	32	**161 484 707**	**198 000 653**
50	1 ½	40	**161 484 708**	**198 000 654**
63	2	50	**161 484 709**	**198 000 655**
75	2 ½	65	**161 483 032**	**161 483 032**
90	3	80	**161 483 033**	**161 483 033**
110	4	100	**161 483 034**	**161 483 034**
160	6	150	**161 483 037**	**161 483 037**

O-ring seal (6)

d (mm)	Size (inch)	DN (mm)	EPDM Code	NBR Code
90	3	80		**745 410 107**
110	4	100		**745 410 107**
160	6	150	**748 410 121**	

Indicator cap (7)

d (mm)	Size (inch)	DN (mm)	PVC-U SAN Code
90	3	80	**161 481 759**
110	4	100	**161 481 760**
160	6	150	**161 482 744**

Spare parts diaphragm valve type 319

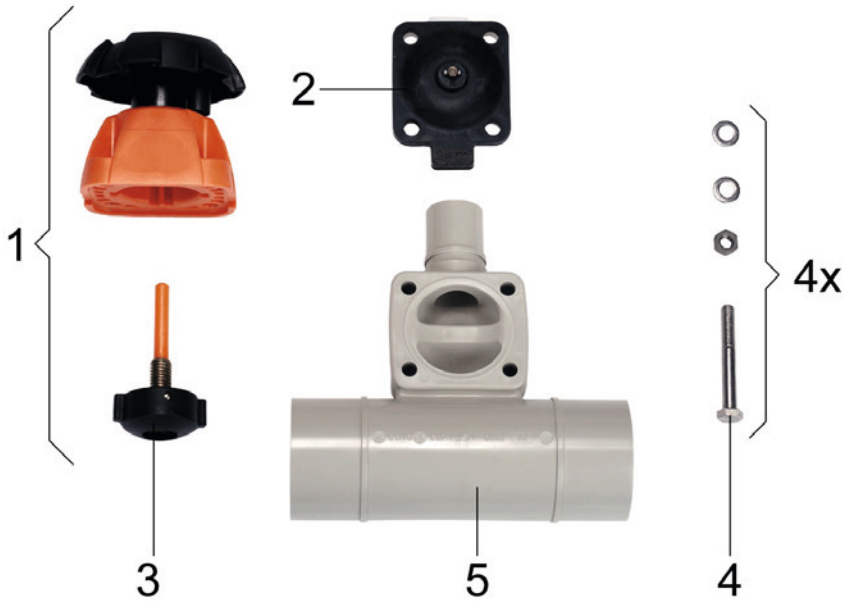

Bonnet complete

Model:

- Without diaphragm (1, 3)

d (mm)	Size (inch)	elastomer diaphragm Code	PTFE diaphragm Code
20-20	½	161 484 625	161 484 632
25-20	¾	161 484 626	161 484 633
25-25	¾	161 484 626	161 484 633
32-20	1	161 484 627	161 484 634
32-25	1	161 484 627	161 484 634
32-32	1	161 484 627	161 484 634
40-20	1 ¼	161 484 627	161 484 634
40-25	1 ¼	161 484 627	175 481 860
40-32	1 ¼	161 484 627	175 481 860
40-40	1 ¼	161 484 628	175 481 861
50-20	1 ½	161 484 627	161 484 634
50-25	1 ½	161 484 627	161 484 634
50-32	1 ½	161 484 627	161 484 634
50-40	1 ½	161 484 629	175 481 862
50-50	1 ½	161 484 629	175 481 862
63-20	2	161 484 627	161 484 634
63-25	2	161 484 627	161 484 634
63-32	2	161 484 627	161 484 634
63-40	2	161 484 630	175 481 863
63-50	2	161 484 630	175 481 863
63-63	2	161 484 630	175 481 863
75-40	2 ½	161 484 628	175 481 861
75-50	2 ½	161 484 630	175 481 863
75-63	2 ½	161 484 630	175 481 863
90-20	3	161 484 627	161 484 634
90-25	3	161 484 627	161 484 634
90-32	3	161 484 627	161 484 634
90-50	3	161 484 630	161 484 636
90-63	3	161 484 630	161 484 636
110-20	4	161 484 627	161 484 634
110-25	4	161 484 627	161 484 634
110-32	4	161 484 627	161 484 634
110-50	4	161 484 630	161 484 636
110-63	4	161 484 630	161 484 636

Diaphragm (2)

d (mm)	NBR Code	EPDM Code	FKM Code	PTFE/EPDM Code	PTFE/FKM Code	CSM Code
20-20	161 311 710	161 481 022	161 481 092	161 311 698	161 481 926	161 311 728
25-20	161 311 711	161 481 023	161 481 093	161 311 699	161 481 927	161 311 729
25-25	161 311 711	161 481 023	161 481 093	161 311 699	161 481 927	161 311 729
32-20	161 311 712	161 481 024	161 481 094	161 311 700	161 481 928	161 311 730
32-25	161 311 712	161 481 024	161 481 094	161 311 700	161 481 928	161 311 730
32-32	161 311 712	161 481 024	161 481 094	161 311 700	161 481 928	161 311 730
40-20	161 311 712	161 481 024	161 481 094	161 311 700	161 481 928	161 311 730
40-25	161 311 712	161 481 024	161 481 094	161 311 700	161 481 928	161 311 730
40-32	161 311 712	161 481 024	161 481 094	161 311 700	161 481 928	161 311 730
40-40	161 311 713	161 481 025	161 481 095	161 311 701	161 481 929	161 311 731
50-20	161 311 712	161 481 024	161 481 094	161 311 700	161 481 928	161 311 730
50-25	161 311 712	161 481 024	161 481 094	161 311 700	161 481 928	161 311 730
50-32	161 311 712	161 481 024	161 481 094	161 311 700	161 481 928	161 311 730
50-40	161 311 714	161 481 026	161 481 096	161 311 702	161 481 930	161 311 732
50-50	161 311 714	161 481 026	161 481 096	161 311 702	161 481 930	161 311 732
63-20	161 311 712	161 481 024	161 481 094	161 311 700	161 481 928	161 311 730
63-25	161 311 712	161 481 024	161 481 094	161 311 700	161 481 928	161 311 730

table continued on the next page

d (mm)	NBR Code	EPDM Code	FKM Code	PTFE/EPDM Code	PTFE/FKM Code	CSM Code
63-32	161 311 712	161 481 024	161 481 094	161 311 700	161 481 928	161 311 730
63-40	161 311 715	161 481 027	161 481 097	161 311 703	161 481 931	161 311 733
63-50	161 311 715	161 481 027	161 481 097	161 311 703	161 481 931	161 311 733
63-63	161 311 715	161 481 027	161 481 097	161 311 703	161 481 931	161 311 733
75-40	161 311 715	161 481 025	161 481 095	161 311 701	161 481 929	161 311 731
75-50	161 311 715	161 481 027	161 481 095	161 311 703	161 481 931	161 311 733
75-63	161 311 715	161 481 027	161 481 097	161 311 703	161 481 931	161 311 733
90-20	161 311 712	161 481 024	161 481 094	161 311 700	161 481 928	161 311 730
90-25	161 311 712	161 481 024	161 481 094	161 311 700	161 481 928	161 311 730
90-32	161 311 712	161 481 024	161 481 094	161 311 700	161 481 928	161 311 730
90-50	161 311 715	161 481 027	161 481 097	161 311 703	161 481 931	161 311 733
90-63	161 311 715	161 481 027	161 481 097	161 311 703	161 481 931	161 311 733
110-20	161 311 712	161 481 024	161 481 094	161 311 700	161 481 928	161 311 730
110-25	161 311 712	161 481 024	161 481 094	161 311 700	161 481 928	161 311 730
110-32	161 311 712	161 481 024	161 481 094	161 311 700	161 481 928	161 311 730
110-50	161 311 715	161 481 027	161 481 097	161 311 703	161 481 931	161 311 733
110-63	161 311 715	161 481 027	161 481 097	161 311 703	161 481 931	161 311 733

d (mm)	PTFE/EPDM SYGEF PLUS Code
20-20	161 484 452
25-20	161 484 453
25-25	161 484 453
32-20	161 484 454
32-25	161 484 454
32-32	161 484 454
40-20	161 484 454
40-25	161 484 454
40-32	161 484 454
40-40	161 484 455
50-20	161 484 454
50-25	161 484 454
50-32	161 484 454
50-40	161 484 456
50-50	161 484 456
63-20	161 484 454
63-25	161 484 454
63-32	161 484 454
63-40	161 484 457
63-50	161 484 457
63-63	161 484 457
75-40	161 484 455
75-50	161 484 457
75-63	161 484 457
90-20	161 484 454
90-25	161 484 454
90-32	161 484 454
90-50	161 484 457
90-63	161 484 457
110-20	161 484 454
110-25	161 484 454
110-32	161 484 454
110-50	161 484 457
110-63	161 484 457

Spare parts line strainer type 305/306

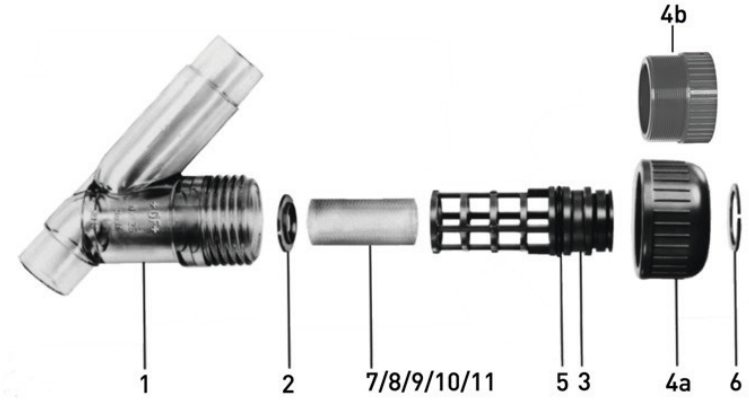

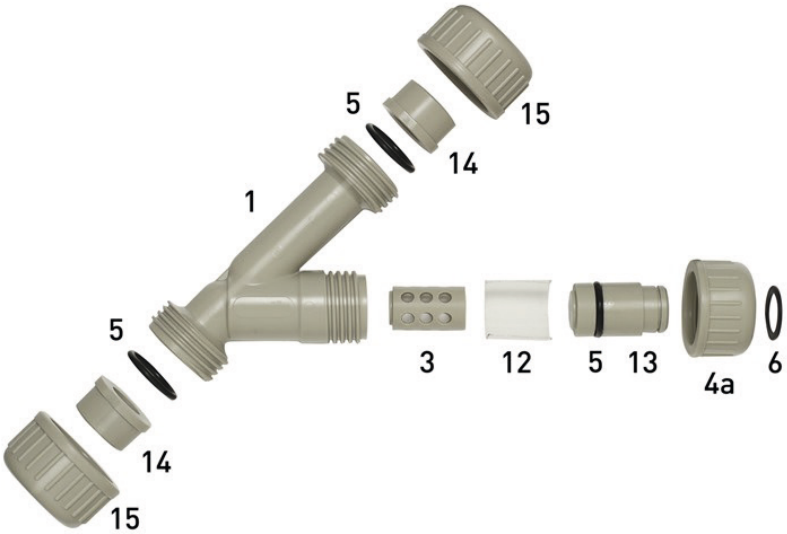

Body (1)

d (mm)	Size (inch)	DN (mm)
20	½	15
25	¾	20
32	1	25
40	1 ¼	32
50	1 ½	40
63	2	50
75	2 ½	65
90	3	80

d (mm)	PVC-U transparent Code	PVC-U transparent ASTM Code	PVC-C Code	ABS Code	PP-H Code	PVC-U metric Code
20	192 300 301	192 480 001	163 481 075	169 480 600	167 305 010	161 300 301
25	192 300 351	192 480 002	163 481 076	169 480 601	167 305 011	161 300 351
32	192 300 401	192 301 401	163 481 077	169 480 602	167 305 012	161 300 401
40	192 300 451	192 301 451	163 481 078	169 480 603	167 305 013	161 300 451
50	192 300 501	192 301 501	163 481 079	169 480 604	167 305 014	161 300 501
63	192 300 551	192 301 551	163 481 080	169 480 605	167 305 015	161 300 551
75	192 300 601					161 300 601
90	192 300 651					161 300 651

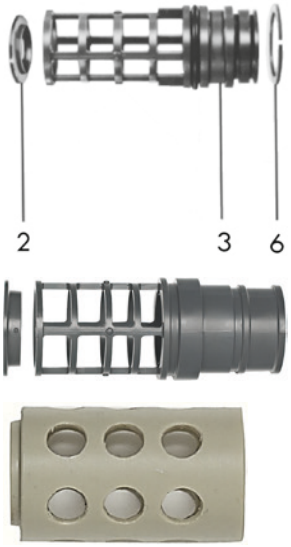

Screen set

Model:

- Screen set PVC-U and PVC-C DN15-DN50 consisting of: screen (3), screen support ring (2) and circlip (6), without o-ring. PVC-U DN65-DN80: screen (3) and screen support ring (2), without o-ring. PP-H DN15-DN50: screen cage (3), circlip (6), screen perforation (12) and screen cage bracket incl. o-ring (13).

d (mm)	Size (inch)	DN (mm)	PVC-U Code	PP-H EPDM Code	PP-H FKM Code	PVC-C Code
20	½	15	161 483 126	167 305 280	167 305 290	163 305 330
25	¾	20	161 483 127	167 305 281	167 305 291	163 305 331
32	1	25	161 483 128	167 305 282	167 305 292	163 305 332
40	1 ¼	32	161 483 129	167 305 283	167 305 293	163 305 333
50	1 ½	40	161 483 130	167 305 284	167 305 294	163 305 334
63	2	50	161 483 131	167 305 285	167 305 295	163 305 335
75	2 ½	65	161 483 132			
90	3	80	161 483 133			

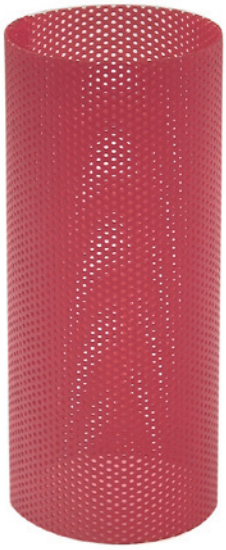

Screen perforation (7-11)

d (mm)	Size (inch)	DN (mm)
20	½	15
25	¾	20
32	1	25
40	1 ¼	32
50	1 ½	40
63	2	50
75	2 ½	65
90	3	80

d (mm)	PVC-U 0.5mm (7) Code	PVC-U 0.8mm (8) Code	PVC-U 1.4mm (9) Code	PVC-U 2.2mm (10) Code	PP-H 0.5mm (12) Code	stainless steel 0.5mm AISI 316 (11) Code
20	161 305 339	161 305 338	161 305 337	161 305 336	167 305 030	161 486 100
25	161 305 389	161 305 388	161 305 387	161 305 386	167 305 031	161 486 101
32	161 305 439	161 305 438	161 305 437	161 305 436	167 305 032	161 486 102
40	161 305 489	161 305 488	161 305 487	161 305 486	167 305 033	161 486 103
50	161 305 539	161 305 538	161 305 537	161 305 536	167 305 034	161 486 104
63	161 305 589	161 305 588	161 305 587	161 305 586	167 305 035	161 486 105
75	161 305 639	161 305 638	161 305 637	161 305 636		161 486 106
90	161 305 689	161 305 688	161 305 687	161 305 686		161 486 107

Screen cage bracket (13)

Model:

- Only available for PP-H version
- With o-ring (5)

d (mm)	Size (inch)	DN (mm)	PP-H EPDM Code	PP-H FKM Code
20	½	15	167 305 260	167 305 270
25	¾	20	167 305 261	167 305 271
32	1	25	167 305 262	167 305 272
40	1 ¼	32	167 305 263	167 305 273
50	1 ½	40	167 305 264	167 305 274
63	2	50	167 305 265	167 305 275

Screen cage (3)

Model:

- Screen cage in PVC-U, PVC-C and PP-H

d (mm)	Size (inch)	DN (mm)	PVC-U Code	PVC-C Code	PP-H Code
20	½	15	**161 305 303**	**163 481 102**	**167 305 020**
25	¾	20	**161 305 353**	**163 481 103**	**167 305 021**
32	1	25	**161 305 403**	**163 481 104**	**167 305 022**
40	1 ¼	32	**161 305 453**	**163 481 105**	**167 305 023**
50	1 ½	40	**161 305 503**	**163 481 106**	**167 305 024**
63	2	50	**161 305 553**	**163 481 107**	**167 305 025**
75	2 ½	65	**161 305 603**		
90	3	80	**161 305 653**		

Circlip (6 + 7)

Description	d (mm)	Size (inch)	DN (mm)	PVC-U Code
	16	⅜	10	**161 482 076**
PP-H	20	½	15	**161 482 017**
PP-H	25	¾	20	**161 482 018**
PP-H	32	1	25	**161 482 019**
PP-H	40	1 ¼	32	**161 482 020**
PP-H	50	1 ½	40	**161 482 021**
PP-H	63	2	50	**161 482 022**

Plug (4b)

Model:

- Only for PVC-U DN65-DN80

d (mm)	Size (inch)	DN (mm)	PVC-U Code
75	2 ½	65	**161 305 604**
90	3	80	**161 305 654**

Body seal (5)

Model:

- Body seal vor PVC-U and PP-H

d (mm)	Size (inch)	DN (mm)	EPDM Code	FKM Code
20	½	15	**748 410 006**	**749 410 006**
25	¾	20	**748 410 001**	**749 410 001**
32	1	25	**748 410 007**	**749 410 007**
40	1 ¼	32	**748 410 002**	**749 410 002**
50	1 ½	40	**748 410 003**	**749 410 003**
63	2	50	**748 410 012**	**749 410 012**
75	2 ½	65	**748 410 013**	**749 410 013**
90	3	80	**748 410 014**	**749 410 014**

Valve nut (4a/15)

Model:

- Union nut PVC-U DN15-DN50, PP-H

d (mm)	Size (inch)	DN (mm)	PVC-U (4a) Code	PVC-C (4a) Code	ABS (4a) Code	PP-H (4a) Code	PP-H (15) Code
20	½	15	161 300 308	163 481 084	169 480 609	167 305 060	167 305 070
25	¾	20	161 300 358	163 481 085	169 480 610	167 305 061	167 305 071
32	1	25	161 300 408	163 481 086	169 480 611	167 305 062	167 305 072
40	1 ¼	32	161 300 458	163 481 087	169 480 612	167 305 063	167 305 073
50	1 ½	40	161 300 508	163 481 088	169 480 613	167 305 064	167 305 074
63	2	50	161 300 558	163 481 089	169 480 614	167 305 065	167 305 075

Spare parts ball check valves type 360

DN 10-50

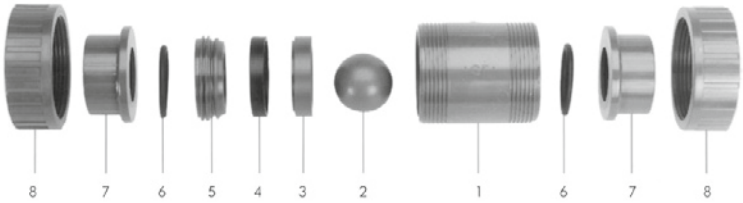

DN 80

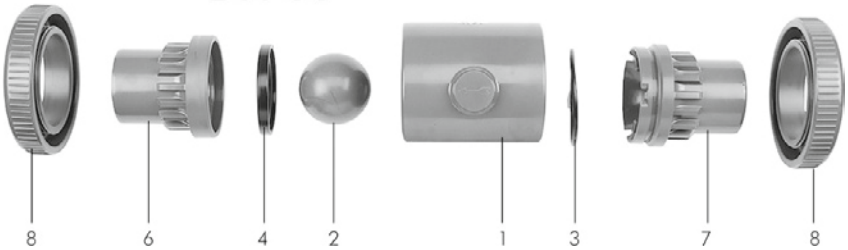

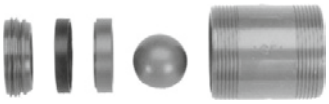

Central part

Model:

- Central part consisting of: body (1), ball (2), support ring (3), sealing ring (4) and union bush (5)

d (mm)	Size (inch)	DN (mm)
16	⅜	10
20	½	15
25	¾	20
32	1	25
40	1 ¼	32
50	1 ½	40
63	2	50

d (mm)	PVC-U EPDM Code	PVC-U FKM Code	PVC-C EPDM Code	PVC-C FKM Code	ABS EPDM Code	PP-H EPDM Code
16	161 483 851	161 483 861	163 480 645	163 480 655	169 480 250	167 481 125
20	161 483 852	161 483 862	163 480 646	163 480 656	169 480 251	167 481 126
25	161 483 853	161 483 863	163 480 647	163 480 657	169 480 252	167 481 127
32	161 483 854	161 483 864	163 480 648	163 480 658	169 480 253	167 481 128
40	161 483 855	161 483 865	163 480 649	163 480 659	169 480 254	167 481 129
50	161 483 856	161 483 866	163 480 650	163 480 660	169 480 255	167 481 130
63	161 483 857	161 483 867	163 480 651	163 480 661	169 480 256	167 481 131

table continued on the next page

d (mm)	PP-H FKM Code
16	167 481 135
20	167 481 136
25	167 481 137
32	167 481 138
40	167 481 139
50	167 481 140
63	167 481 141

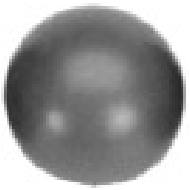

Ball (2)

d (mm)	Size (inch)	DN (mm)	PVC-U Code	PP-H with talc density 1.24 Code	PP-H 100% Code	PVDF Code
16	⅜	10	161 330 304	167 481 165	167 480 024	175 480 153
20	½	15	161 330 304	167 481 165	167 480 024	175 480 153
25	¾	20	161 330 354	167 481 166	167 480 025	175 480 154
32	1	25	161 330 404	167 481 167	167 480 026	175 480 155
40	1 ¼	32	161 330 454	167 481 168	167 480 027	175 480 156
50	1 ½	40	161 330 504	167 481 169	167 480 028	175 480 157
63	2	50	161 330 554	167 481 170	167 480 029	175 480 158
90	3	80	161 330 654			

Seal set (4, 6)

d (mm)	Size (inch)	DN (mm)	EPDM Code	FKM Code
16	⅜	10	161 482 910	161 482 920
20	½	15	161 482 910	161 482 920
25	¾	20	161 482 911	161 482 921
32	1	25	161 482 912	161 482 922
40	1 ¼	32	161 482 913	161 482 923
50	1 ½	40	161 482 914	161 482 924
63	2	50	161 482 915	161 482 925

Spare parts ventilating- and bleed valve type 591/595

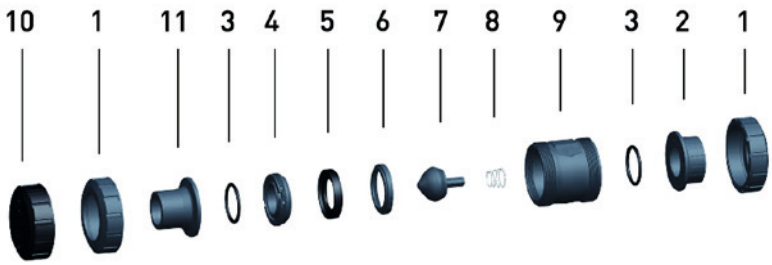

Central part with spring for Bleeding valve type 595

Model:

- Central body consisting of: housing (9), union bush (4), support ring (6), floater (7), spring Nimonic 90 Halar coated (8), profile seal ring (5) and face seal (3)

d (mm)	Size (inch)	DN (mm)
16	⅜	10
20	½	15
25	¾	20
32	1	25
40	1 ¼	32
50	1 ½	40
63	2	50
75	2 ½	65
90	3	80
110	4	100

d (mm)	PVC-U EPDM Code	PVC-U FKM Code	PVC-C EPDM Code	PVC-C FKM Code	ABS EPDM Code	PP-H EPDM Code
16	**161 485 281**	**161 485 291**	**163 485 281**	**163 485 291**	**169 485 281**	**167 485 281**
20	**161 485 281**	**161 485 291**	**163 485 281**	**163 485 291**	**169 485 281**	**167 485 281**
25	**161 485 282**	**161 485 292**	**163 485 282**	**163 485 292**	**169 485 282**	**167 485 282**
32	**161 485 283**	**161 485 293**	**163 485 283**	**163 485 293**	**169 485 283**	**167 485 283**
40	**161 485 284**	**161 485 294**	**163 485 284**	**163 485 294**	**169 485 284**	**167 485 284**
50	**161 485 285**	**161 485 295**	**163 485 285**	**163 485 295**	**169 485 285**	**167 485 285**
63	**161 485 286**	**161 485 296**	**163 485 286**	**163 485 296**	**169 485 286**	**167 485 286**
75	**161 485 287**	**161 485 297**	**163 485 287**	**163 485 297**	**169 485 287**	**167 485 287**
90	**161 485 288**	**161 485 298**	**163 485 288**	**163 485 298**	**169 485 288**	**167 485 288**
110	**161 485 289**	**161 485 299**	**163 485 289**	**163 485 299**	**169 485 289**	**167 485 289**

d (mm)	PP-H FKM Code	PVDF FKM Code
16	**167 485 291**	**175 485 291**
20	**167 485 291**	**175 485 291**
25	**167 485 292**	**175 485 292**
32	**167 485 293**	**175 485 293**
40	**167 485 294**	**175 485 294**
50	**167 485 295**	**175 485 295**
63	**167 485 296**	**175 485 296**
75	**167 485 297**	**175 485 297**
90	**167 485 298**	**175 485 298**
110	**167 485 299**	**175 485 299**

Central part without spring for Ventilating and Bleed valve 591

Model:

- Central body consisting of: housing (9), union bush (4), support ring (6), floater PP-H/PVDF (7), profile seal ring (5) and face seal (3)

d (mm)	Size (inch)	DN (mm)
16	⅜	10
20	½	15
25	¾	20
32	1	25
40	1 ¼	32
50	1 ½	40

table continued on the next page

d (mm)	Size (inch)	DN (mm)
63	2	50
75	2 ½	65
90	3	80
110	4	100

d (mm)	PVC-U EPDM Code	PVC-U FKM Code	PVC-C EPDM Code	PVC-C FKM Code	ABS EPDM Code	PP-H EPDM Code
16	161 485 261	161 485 271	163 485 261	163 485 271	169 485 261	167 485 261
20	161 485 261	161 485 271	163 485 261	163 485 271	169 485 261	167 485 261
25	161 485 262	161 485 272	163 485 262	163 485 272	169 485 262	167 485 262
32	161 485 263	161 485 273	163 485 263	163 485 273	169 485 263	167 485 263
40	161 485 264	161 485 274	163 485 264	163 485 274	169 485 264	167 485 264
50	161 485 265	161 485 275	163 485 265	163 485 275	169 485 265	167 485 265
63	161 485 266	161 485 276	163 485 266	163 485 276	169 485 266	167 485 266
75	161 485 267	161 485 277	163 485 267	163 485 277	169 485 267	167 485 267
90	161 485 268	161 485 278	163 485 268	163 485 278	169 485 268	167 485 268
110	161 485 269	161 485 279	163 485 269	163 485 279	169 485 269	167 485 269

d (mm)	PP-H FKM Code	PVDF FKM Code
16	167 485 271	175 485 271
20	167 485 271	175 485 271
25	167 485 272	175 485 272
32	167 485 273	175 485 273
40	167 485 274	175 485 274
50	167 485 275	175 485 275
63	167 485 276	175 485 276
75	167 485 277	175 485 277
90	167 485 278	175 485 278
110	167 485 279	175 485 279

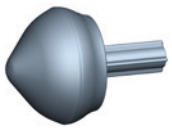

Cone (7)

Model:

- For type 595

d (mm)	Size (inch)	DN (mm)	PVC-U Code	PVC-C Code	ABS Code	PP-H Code	PVDF Code
16	⅜	10	161 491 151	163 482 151	169 482 151	167 485 151	175 484 151
25	¾	20	161 491 152	163 482 152	169 482 152	167 485 152	175 484 152
32	1	25	161 491 153	163 482 153	169 482 153	167 485 153	175 484 153
40	1 ¼	32	161 491 154	163 482 154	169 482 154	167 485 154	175 484 154
50	1 ½	40	161 491 155	163 482 155	169 482 155	167 485 155	175 484 155
63	2	50	161 491 156	163 482 156	169 482 156	167 485 156	175 484 156
75	2 ½	65	161 491 157	163 482 157	169 482 157	167 485 157	175 484 157
90	3	80	161 491 158	163 482 158	169 482 158	167 485 158	175 484 158
110	4	100	161 491 159	163 482 159	169 482 159	167 485 159	175 484 159

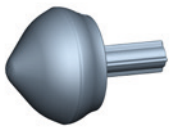

Floater (7)

Model:

- For type 591

d (mm)	Size (inch)	DN (mm)	PP-H Code	PVDF Code
16	⅜	10	167 485 151	175 484 161
20	½	15	167 485 151	175 484 161
25	¾	20	167 485 152	175 484 162
32	1	25	167 485 153	175 484 163

table continued on the next page

d (mm)	Size (inch)	DN (mm)	PP-H Code	PVDF Code
40	1 ¼	32	**167 485 154**	**175 484 164**
50	1 ½	40	**167 485 155**	**175 484 165**
63	2	50	**167 485 156**	**175 484 166**
75	2 ½	65	**167 485 157**	**175 484 167**
90	3	80	**167 485 158**	**175 484 168**
110	4	100	**167 485 159**	**175 484 169**

Protective cap (10)

Model:

- Protects the piping system from dirt particles out of the ambient airCan also be used as tool for opening and closing the valve union bushing

d (mm)	Size (inch)	DN (mm)	PP-GF Code
16	⅜	10	**167 485 361**
20	½	15	**167 485 361**
25	¾	20	**167 485 362**
32	1	25	**167 485 363**
40	1 ¼	32	**167 485 364**
50	1 ½	40	**167 485 365**
63	2	50	**167 485 366**
75	2 ½	65	**167 485 367**
90	3	80	**167 485 368**
110	4	100	**167 485 369**

Seal set

Model:

- Seal set consisting of: profile seal ring (5) and face seal (3)

d (mm)	Size (inch)	DN (mm)	EPDM Code	FKM Code
16	⅜	10	**161 485 241**	**161 485 251**
20	½	15	**161 485 241**	**161 485 251**
25	¾	20	**161 485 242**	**161 485 252**
32	1	25	**161 485 243**	**161 485 253**
40	1 ¼	32	**161 485 244**	**161 485 254**
50	1 ½	40	**161 485 245**	**161 485 255**
63	2	50	**161 485 246**	**161 485 256**
75	2 ½	65	**161 485 247**	**161 485 257**
90	3	80	**161 485 248**	**161 485 258**
110	4	100	**161 485 249**	**161 485 259**

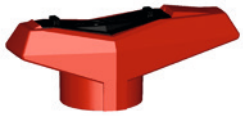

DN10/15 - 50

Handle for dismantling

d (mm)	Size (inch)	DN (mm)	red Code	black Code
16	⅜	10	**167 484 088**	**167 484 076**
20	½	15	**167 484 088**	**167 484 076**
25	¾	20	**167 484 089**	**167 484 077**
32	1	25	**167 484 090**	**167 484 078**
40	1 ¼	32	**167 484 091**	**167 484 079**
50	1 ½	40	**167 484 092**	**167 484 080**

table continued on the next page

d (mm)	Size (inch)	DN (mm)	red Code	black Code
63	2	50	**167 484 093**	**167 484 081**
75	2 ½	65	**167 484 094**	**167 484 082**
90	3	80	**167 484 095**	**167 484 083**
110	4	100	**167 484 096**	**167 484 084**

Spare parts angel seat valves type 300/301

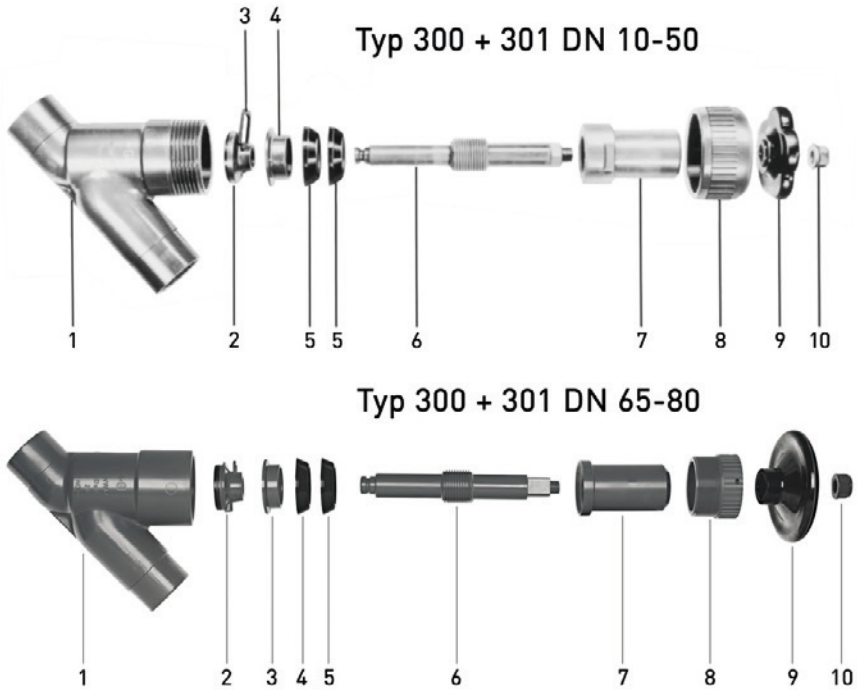

Bonnet complete

Model:

- Bonnet complete consisting of: seal element PVC-U and seating PE, retaining pin, seal support ring, stem, threaded bush, union nut and handwheel nut in PVC-U, cup seal and handwheel in PE (2 -10)

d (mm)	Size (inch)	DN (mm)	PVC-U/PE Code
63	2	50	**161 482 256**
75	2 ½	65	**161 482 257**
90	3	80	**161 482 258**

Body (1)

d (mm)	Size (inch)	DN (mm)	PVC-U metric Code	PVC-U transparent ASTM Code
16	⅜	10	**161 300 251**	
20	½	15	**161 300 301**	**192 480 001**
25	¾	20	**161 300 351**	**192 480 002**
32	1	25	**161 300 401**	**192 301 401**
40	1 ¼	32	**161 300 451**	**192 301 451**

table continued on the next page

d (mm)	Size (inch)	DN (mm)	PVC-U metric Code	PVC-U transparent ASTM Code
50	1 ½	40	**161 300 501**	**192 301 501**
63	2	50	**161 300 551**	**192 301 551**
75	2 ½	65	**161 300 601**	
90	3	80	**161 300 651**	**192 301 651**

Plug

Model:

- DN65-DN80 (8)

d (mm)	Size (inch)	DN (mm)	PVC-U Code
75	2 ½	65	**161 300 608**
90	3	80	**161 300 658**

Handwheel (9)

d (mm)	Size (inch)	DN (mm)	Code
16	⅜	10	**161 300 259**
20	½	15	**161 300 309**
25	¾	20	**161 300 309**
32	1	25	**161 300 409**
40	1 ¼	32	**161 300 459**
50	1 ½	40	**161 300 509**
63	2	50	**161 300 559**
75	2 ½	65	**161 300 609**
90	3	80	**161 300 659**

Handwheel nut (10)

d (mm)	Size (inch)	DN (mm)	PVC-U Code
16	⅜	10	**161 300 260**
20	½	15	**721 960 603**
25	¾	20	**721 960 603**
32	1	25	**721 960 603**
40	1 ¼	32	**721 960 604**
50	1 ½	40	**721 960 604**
63	2	50	**721 960 605**
75	2 ½	65	**721 960 606**
90	3	80	**721 960 607**

Stem set

Model:

- Stem set consisting of: stem and threaded bush (6, 7)

d (mm)	Size (inch)	DN (mm)	PVC-U Code
16	⅜	10	**161 483 062**
20	½	15	**161 483 063**
25	¾	20	**161 483 064**
32	1	25	**161 483 065**
40	1 ¼	32	**161 483 066**

table continued on the next page

d (mm)	Size (inch)	DN (mm)	PVC-U Code
50	1 ½	40	**161 483 067**
63	2	50	**161 483 068**
75	2 ½	65	**161 483 069**
90	3	80	**161 483 070**

Union nut

Model:

- DN10-DN50 (8)

d (mm)	Size (inch)	DN (mm)	PVC-U Code
16	⅜	10	**161 300 258**
20	½	15	**161 300 308**
25	¾	20	**161 300 358**
32	1	25	**161 300 408**
40	1 ¼	32	**161 300 458**
50	1 ½	40	**161 300 508**
63	2	50	**161 300 558**

Disc retaining pin set

Model:

- Disc retaining pin set consisting of: seal element and seating, retaining pin, screen support and cup seal (2-5)

d (mm)	Size (inch)	DN (mm)	PE Code	PTFE Code
16	⅜	10	**161 483 076**	**161 483 089**
20	½	15	**161 483 077**	**161 483 090**
25	¾	20	**161 483 078**	**161 483 091**
32	1	25	**161 483 079**	**161 483 092**
40	1 ¼	32	**161 483 080**	**161 483 093**
50	1 ½	40	**161 483 081**	**161 483 094**
63	2	50	**161 483 082**	**161 483 095**
75	2 ½	65	**161 483 083**	**161 483 096**
90	3	80	**161 483 084**	**161 483 097**

Spare parts angle seat valve type 303/304

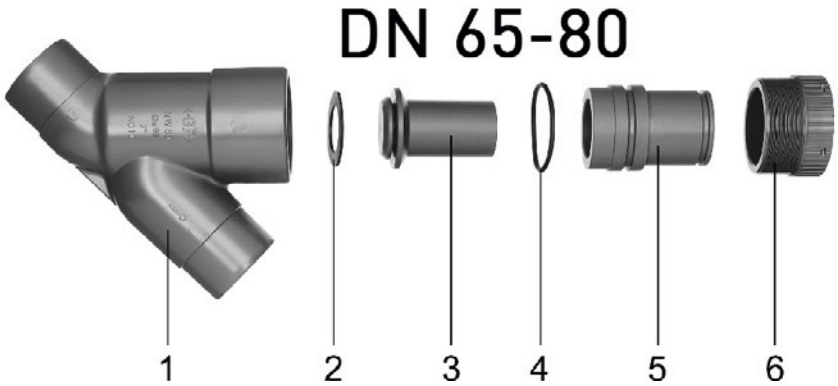

Body (1)

d (mm)	Size (inch)	DN (mm)	PVC-U Code	PVC-U transparent ASTM Code
16	⅜	10	**161 480 699**	
20	½	15	**161 480 700**	**192 480 001**
25	¾	20	**161 480 701**	**192 480 002**
32	1	25	**161 300 401**	**192 301 401**
40	1 ¼	32	**161 300 451**	**192 301 451**
50	1 ½	40	**161 300 501**	**192 301 501**
63	2	50	**161 300 551**	**192 301 551**
75	2 ½	65	**161 300 601**	
90	3	80	**161 300 651**	**192 301 651**

Closure plug (5)

d (mm)	Size (inch)	DN (mm)	PVC-U Code
16	⅜	10	**161 480 648**
20	½	15	**161 480 649**
25	¾	20	**161 480 650**
32	1	25	**161 480 651**
40	1 ¼	32	**161 480 652**
50	1 ½	40	**161 480 653**
63	2	50	**161 480 654**
75	2 ½	65	**161 490 412**
90	3	80	**161 490 413**

Plug

Model:

- DN65-DN80 (6)

d (mm)	Size (inch)	DN (mm)	PVC-U Code
75	2 ½	65	**161 305 604**
90	3	80	**161 305 654**

Flat gasket (2)

d (mm)	Size (inch)	DN (mm)	EPDM Code	FKM Code
16	⅜	10	**161 480 664**	**161 480 673**
20	½	15	**161 480 665**	**161 480 674**
25	¾	20	**161 480 666**	**161 480 675**
32	1	25	**161 480 667**	**161 480 676**
40	1 ¼	32	**161 480 668**	**161 480 677**
50	1 ½	40	**161 480 669**	**161 480 678**
63	2	50	**161 480 670**	**161 480 679**
75	2 ½	65	**161 480 671**	**161 480 680**
90	3	80	**161 480 672**	**161 480 681**

Union nut

Model:

- DN10-DN50 (6)

d (mm)	Size (inch)	DN (mm)	PVC-U Code
16	⅜	10	**161 300 258**
20	½	15	**161 300 308**
25	¾	20	**161 300 358**
32	1	25	**161 300 408**
40	1 ¼	32	**161 300 458**
50	1 ½	40	**161 300 508**
63	2	50	**161 300 558**

O-ring (4)

d (mm)	Size (inch)	DN (mm)	EPDM Code	FKM Code
16	⅜	10	**748 410 059**	**749 410 059**
20	½	15	**748 410 106**	**749 410 106**
25	¾	20	**748 410 001**	**749 410 001**
32	1	25	**748 410 007**	**749 410 007**
40	1 ¼	32	**748 410 002**	**749 410 002**
50	1 ½	40	**748 410 102**	**749 410 102**
63	2	50	**748 410 101**	**749 410 101**
75	2 ½	65	**748 410 119**	**749 410 119**
90	3	80	**748 410 014**	**749 410 014**

Piston (3)

d (mm)	Size (inch)	DN (mm)	PVC-U Code
16	⅜	10	**161 480 682**
20	½	15	**161 480 683**
25	¾	20	**161 480 684**
32	1	25	**161 480 685**
40	1 ¼	32	**161 480 686**
50	1 ½	40	**161 480 687**
63	2	50	**161 480 688**
75	2 ½	65	**161 480 689**
90	3	80	**161 480 690**

Spare parts cone check valve type 561/562

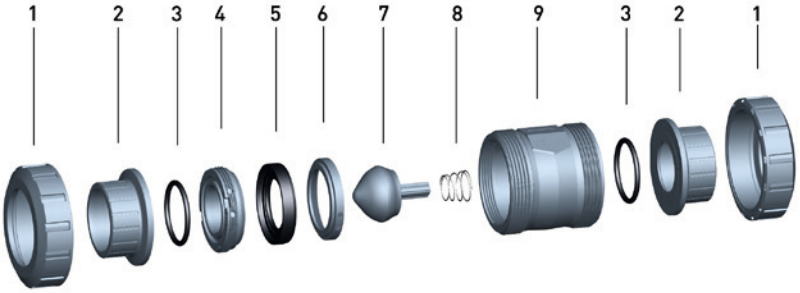

Central part without spring

Model:

- Central body consisting of: housing (9), union bush (4), support ring (6), cone (7), profile seal ring (5) and face seal (3)

d (mm)	Size (inch)	DN (mm)
16	⅜	10
20	½	15
25	¾	20
32	1	25
40	1 ¼	32
50	1 ½	40

table continued on the next page

d (mm)	Size (inch)	DN (mm)
63	2	50
75	2 ½	65
90	3	80
110	4	100

d (mm)	PVC-U EPDM Code	PVC-U FKM Code	PVC-C EPDM Code	PVC-C FKM Code	ABS EPDM Code	PP-H EPDM Code
16	161 485 201	161 485 211	163 485 201	163 485 211	169 485 201	167 485 201
20	161 485 201	161 485 211	163 485 201	163 485 211	169 485 201	167 485 201
25	161 485 202	161 485 212	163 485 202	163 485 212	169 485 202	167 485 202
32	161 485 203	161 485 213	163 485 203	163 485 213	169 485 203	167 485 203
40	161 485 204	161 485 214	163 485 204	163 485 214	169 485 204	167 485 204
50	161 485 205	161 485 215	163 485 205	163 485 215	169 485 205	167 485 205
63	161 485 206	161 485 216	163 485 206	163 485 216	169 485 206	167 485 206
75	161 485 207	161 485 217	163 485 207	163 485 217	169 485 207	167 485 207
90	161 485 208	161 485 218	163 485 208	163 485 218	169 485 208	167 485 208
110	161 485 209	161 485 219	163 485 209	163 485 219	169 485 209	167 485 209

d (mm)	PP-H FKM Code	PVDF FKM Code
16	167 485 211	175 485 211
20	167 485 211	175 485 211
25	167 485 212	175 485 212
32	167 485 213	175 485 213
40	167 485 214	175 485 214
50	167 485 215	175 485 215
63	167 485 216	175 485 216
75	167 485 217	175 485 217
90	167 485 218	175 485 218
110	167 485 219	175 485 219

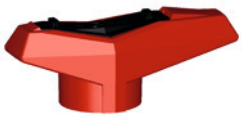

DN10/15 - 50

Handle for dismantling

d (mm)	Size (inch)	DN (mm)	red Code	black Code
16	⅜	10	167 484 088	167 484 076
20	½	15	167 484 088	167 484 076
25	¾	20	167 484 089	167 484 077
32	1	25	167 484 090	167 484 078
40	1 ¼	32	167 484 091	167 484 079
50	1 ½	40	167 484 092	167 484 080
63	2	50	167 484 093	167 484 081
75	2 ½	65	167 484 094	167 484 082
90	3	80	167 484 095	167 484 083
110	4	100	167 484 096	167 484 084

Face seal (3)

d (mm)	Size (inch)	DN (mm)	EPDM Code	FKM Code
16	⅜	10	748 410 059	749 410 059
20	½	15	748 410 059	749 410 059
25	¾	20	748 410 106	749 410 106
32	1	25	748 410 151	749 410 151
40	1 ¼	32	748 410 062	749 410 062
50	1 ½	40	748 410 003	749 410 003

table continued on the next page

d (mm)	Size (inch)	DN (mm)	EPDM Code	FKM Code
63	2	50	**748 410 231**	**749 410 231**
75	2 ½	65	**748 410 119**	**749 410 119**
90	3	80	**748 410 023**	**749 410 023**
110	4	100	**748 410 254**	**749 410 254**

Seal set

Model:

- Seal set consisting of: profile seal ring (5) and face seal (3)

d (mm)	Size (inch)	DN (mm)	EPDM Code	FKM Code
16	⅜	10	**161 485 241**	**161 485 251**
20	½	15	**161 485 241**	**161 485 251**
25	¾	20	**161 485 242**	**161 485 252**
32	1	25	**161 485 243**	**161 485 253**
40	1 ¼	32	**161 485 244**	**161 485 254**
50	1 ½	40	**161 485 245**	**161 485 255**
63	2	50	**161 485 246**	**161 485 256**
75	2 ½	65	**161 485 247**	**161 485 257**
90	3	80	**161 485 248**	**161 485 258**
110	4	100	**161 485 249**	**161 485 259**

Profile seal ring (5)

d (mm)	Size (inch)	DN (mm)	EPDM Code	FKM Code
16	⅜	10	**748 436 001**	**749 436 001**
20	½	15	**748 436 001**	**749 436 001**
25	¾	20	**748 436 002**	**749 436 002**
32	1	25	**748 436 003**	**749 436 003**
40	1 ¼	32	**748 436 004**	**749 436 004**
50	1 ½	40	**748 436 005**	**749 436 005**
63	2	50	**748 436 006**	**749 436 006**
75	2 ½	65	**748 436 007**	**749 436 007**
90	3	80	**748 436 008**	**749 436 008**
110	4	100	**748 436 009**	**749 436 009**

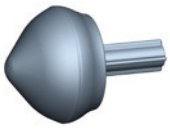

Cone (7)

d (mm)	Size (inch)	DN (mm)	PVC-U Code	PVC-C Code	ABS Code	PP-Talkum 20% Code	PVDF Code
16	⅜	10	**161 491 151**	**163 482 151**	**169 482 151**	**167 485 351**	**175 484 151**
20	½	15	**161 491 151**	**163 482 151**	**169 482 151**	**167 485 351**	**175 484 151**
25	¾	20	**161 491 152**	**163 482 152**	**169 482 152**	**167 485 352**	**175 484 152**
32	1	25	**161 491 153**	**163 482 153**	**169 482 153**	**167 485 353**	**175 484 153**
40	1 ¼	32	**161 491 154**	**163 482 154**	**169 482 154**	**167 485 354**	**175 484 154**
50	1 ½	40	**161 491 155**	**163 482 155**	**169 482 155**	**167 485 355**	**175 484 155**
63	2	50	**161 491 156**	**163 482 156**	**169 482 156**	**167 485 356**	**175 484 156**
75	2 ½	65	**161 491 157**	**163 482 157**	**169 482 157**	**167 485 357**	**175 484 157**
90	3	80	**161 491 158**	**163 482 158**	**169 482 158**	**167 485 358**	**175 484 158**
110	4	100	**161 491 159**	**163 482 159**	**169 482 159**	**167 485 359**	**175 484 159**

Spring (8)

Model:

- Material: NIMONIC 90, code: 2.4632
- Material: Stainless steel, code: 1.4310, HALAR® coated
- Material: Stainless steel, code: 1.4310

d (mm)	Size (inch)	DN (mm)	Stainless steel Code	Stainless steel HALAR coated Code	NIMONIC 90 Code
16 - 25	⅜ - ¼	10 - 20	**161 485 132**	**161 485 142**	**161 485 152**
32	1	25	**161 485 133**	**161 485 143**	**161 485 153**
40	1 ¼	32	**161 485 134**	**161 485 144**	**161 485 154**
50	1 ½	40	**161 485 135**	**161 485 145**	**161 485 155**
63	2	50	**161 485 136**	**161 485 146**	**161 485 156**
75	2 ½	65	**161 485 137**	**161 485 147**	**161 485 157**
90	3	80	**161 485 138**	**161 485 148**	**161 485 158**
110	4	100	**161 485 139**	**161 485 149**	**161 485 159**

Central part with spring

Model:

- Central body consisting of: housing (9), union bush (4), support ring (6), cone (7), spring V2A (8), profile seal ring (5) and face seal (3)

d (mm)	Size (inch)	DN (mm)
16	⅜	10
20	½	15
25	¾	20
32	1	25
40	1 ¼	32
50	1 ½	40
63	2	50
75	2 ½	65
90	3	80
110	4	100

d (mm)	PVC-U EPDM Code	PVC-U FKM Code	PVC-C EPDM Code	PVC-C FKM Code	ABS EPDM Code	PP-H EPDM Code
16	**161 485 221**	**161 485 231**	**163 485 221**	**163 485 231**	**169 485 221**	**167 485 231**
20	**161 485 221**	**161 485 231**	**163 485 221**	**163 485 231**	**169 485 221**	**167 485 231**
25	**161 485 222**	**161 485 232**	**163 485 222**	**163 485 232**	**169 485 222**	**167 485 232**
32	**161 485 223**	**161 485 233**	**163 485 223**	**163 485 233**	**169 485 223**	**167 485 233**
40	**161 485 224**	**161 485 234**	**163 485 224**	**163 485 234**	**169 485 224**	**167 485 234**
50	**161 485 225**	**161 485 235**	**163 485 225**	**163 485 235**	**169 485 225**	**167 485 235**
63	**161 485 226**	**161 485 236**	**163 485 226**	**163 485 236**	**169 485 226**	**167 485 236**
75	**161 485 227**	**161 485 237**	**163 485 227**	**163 485 237**	**169 485 227**	**167 485 237**
90	**161 485 228**	**161 485 238**	**163 485 228**	**163 485 238**	**169 485 228**	**167 485 238**
110	**161 485 229**	**161 485 239**	**163 485 229**	**163 485 239**	**169 485 229**	**167 485 239**

d (mm)	PP-H FKM Code	PVDF FKM Code
16	**167 485 241**	**175 485 231**
20	**167 485 241**	**175 485 231**
25	**167 485 242**	**175 485 232**
32	**167 485 243**	**175 485 233**
40	**167 485 244**	**175 485 234**
50	**167 485 245**	**175 485 235**

table continued on the next page

d (mm)	PP-H FKM Code	PVDF FKM Code
63	**167 485 246**	**175 485 236**
75	**167 485 247**	**175 485 237**
90	**167 485 248**	**175 485 238**
110	**167 485 249**	**175 485 239**

Variable area flow meter type 350

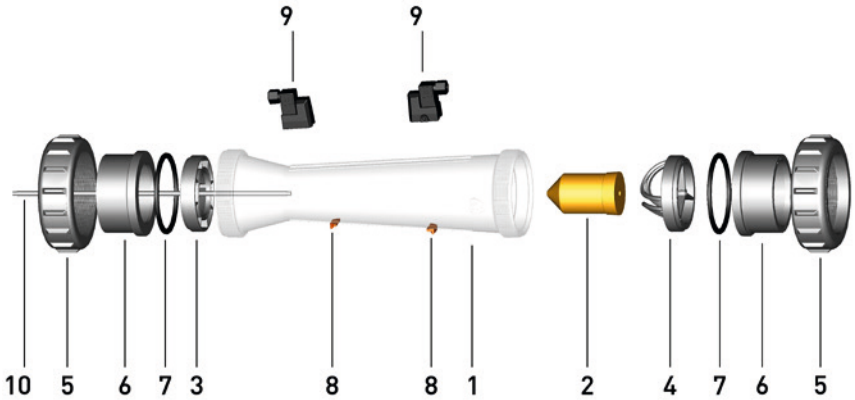

Taper tube with water scale (1)

d (mm)	Size (inch)	DN (mm)	Scale range (l/min)	PVC-U transparent Code	Polyamid Code	Polysulfon Code
32	1	25	50 - 500	**198 350 055**	**198 350 070**	**198 350 085**
32	1	25	100 - 1000	**198 350 056**	**198 350 071**	**198 350 086**
40	1 ¼	32	150 - 1500	**198 350 057**	**198 350 072**	**198 350 087**
40	1 ¼	32	250 - 2500	**198 350 058**	**198 350 073**	**198 350 088**
50	1 ½	40	200 - 2000	**198 350 059**	**198 350 074**	**198 350 089**
50	1 ½	40	300 - 3000	**198 350 060**	**198 350 075**	**198 350 090**
50	1 ½	40	600 - 6000	**198 350 061**	**198 350 076**	**198 350 091**
63	2	50	600 - 6000	**198 350 062**	**198 350 077**	**198 350 092**
63	2	50	1000 - 10000	**198 350 063**	**198 350 078**	**198 350 093**
63	2	50	1500 - 15000	**198 350 064**	**198 350 079**	**198 350 094**
75	2 ½	65	2000 - 20000	**198 350 065**	**198 350 080**	**198 350 095**
75	2 ½	65	3000 - 30000	**198 350 066**	**198 350 081**	**198 350 096**
75	2 ½	65	8000 - 60000	**198 350 067**	**198 350 082**	**198 350 097**

Taper tube without scale (1)

d (mm)	Size (inch)	DN (mm)	Scale range (l/h)	PVC-U transparent Code	Polyamid Code	Polysulfon Code
32	1	25	50 - 500	**198 350 255**	**198 350 270**	**198 350 285**
32	1	25	100 - 1000	**198 350 256**	**198 350 271**	**198 350 286**
40	1 ¼	32	150 - 1500	**198 350 257**	**198 350 272**	**198 350 287**
40	1 ¼	32	250 - 2500	**198 350 258**	**198 350 273**	**198 350 288**
50	1 ½	40	200 - 2000	**198 350 259**	**198 350 274**	**198 350 289**
50	1 ½	40	300 - 3000	**198 350 260**	**198 350 275**	**198 350 290**
50	1 ½	40	600 - 6000	**198 350 261**	**198 350 276**	**198 350 291**
63	2	50	600 - 6000	**198 350 262**	**198 350 277**	**198 350 292**
63	2	50	1000 - 10000	**198 350 263**	**198 350 278**	**198 350 293**

table continued on the next page

d (mm)	Size (inch)	DN (mm)	Scale range (l/h)	PVC-U transparent Code	Polyamid Code	Polysulfon Code
63	2	50	1500 - 15000	**198 350 264**	**198 350 279**	**198 350 294**
75	2 ½	65	2000 - 20000	**198 350 265**	**198 350 280**	**198 350 295**
75	2 ½	65	3000 - 30000	**198 350 266**	**198 350 281**	**198 350 296**
75	2 ½	65	8000 - 60000	**198 350 267**	**198 350 282**	**198 350 297**

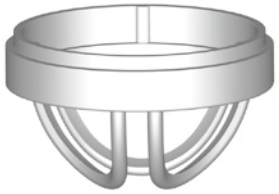

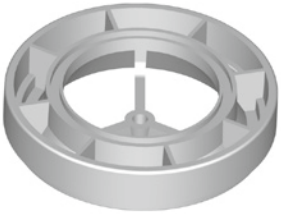

Insert PVDF (3,4)

d (mm)	Size (inch)	DN (mm)	Scale range (l/h)	top (4) Code	bottom (3) Code
32	1	25	50 - 500	**198 335 970**	**198 335 977**
32	1	25	100 - 1000	**198 335 970**	**198 335 977**
40	1 ¼	32	150 - 1500	**198 335 971**	**198 335 978**
40	1 ¼	32	250 - 2500	**198 335 971**	**198 335 978**
50	1 ½	40	200 - 2000	**198 335 972**	**198 335 979**
50	1 ½	40	300 - 3000	**198 335 972**	**198 335 979**
50	1 ½	40	600 - 6000	**198 335 972**	**198 335 979**
63	2	50	600 - 6000	**198 335 973**	**198 335 980**
63	2	50	1000 - 10000	**198 335 973**	**198 335 980**
63	2	50	1500 - 15000	**198 335 974**	
75	2 ½	65	2000 - 20000	**198 335 975**	
75	2 ½	65	3000 - 30000	**198 335 975**	
75	2 ½	65	8000 - 60000	**198 335 975**	

Guiding rod (10)

Model:

- Only for DN50 (1'500 - 15'000 l/h) and DN65 (all scale ranges)

d (mm)	Size (inch)	DN (mm)	Scale range (l/h)	PVDF Code
63	2	50	1500 - 15000	**198 350 981**
75	2 ½	65	2000 - 20000	**198 350 981**
75	2 ½	65	3000 - 30000	**198 350 981**
75	2 ½	65	8000 - 60000	**198 350 981**

Insert guiding rod PVDF (for 10)

Model:

- Only for DN50 (1'500 - 15'000 l/h) and DN65 (all scale ranges)

d (mm)	Size (inch)	DN (mm)	Scale range (l/h)	for PEEK and stainless steel Code	for PVDF/ SS Code
63	2	50	1500 - 15000		**198 335 953**
75	2 ½	65	2000 - 20000	**198 335 987**	**198 335 954**
75	2 ½	65	3000 - 30000	**198 335 987**	**198 335 954**
75	2 ½	65	8000 - 60000	**198 335 987**	**198 335 954**

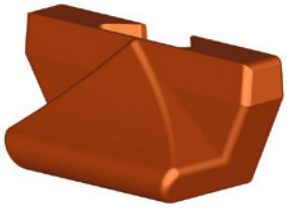

Flow value indicator PS (8)

Model:

- For all dimensions type 335/350

d (mm)	Size (inch)	DN (mm)	Flow value indicator Code
32	1	25	**198 335 990**
40	1 ¼	32	**198 335 990**
50	1 ½	40	**198 335 990**
63	2	50	**198 335 990**
75	2 ½	65	**198 335 990**

O-rings (7)

d (mm)	Size (inch)	DN (mm)	EPDM Code	FKM Code
32	1	25	**748 410 008**	**749 410 008**
40	1 ¼	32	**748 410 009**	**749 410 009**
50	1 ½	40	**748 410 010**	**749 410 010**
63	2	50	**748 410 011**	**749 410 011**
75	2 ½	65	**748 410 014**	**749 410 014**

Union nut PVC-U

*also for diaphragm valves type 514/DIASTAR, pressure regulating valves type 582/586 and variable area flow
**just for variable area flow meter
***for adaptor unions PVC-U / malleable iron only

	d (mm)	PN (bar)	PVC-U Code	Weight (kg)	Tr	G (inch)	D (mm)	L (mm)
	10 - 12	16	**721 890 004**	0.009		⅝	19	19
	16	16	**721 890 005**	0.011		¾	22	21
*	20	16	**721 890 006**	0.020		1	28	23
*	25	16	**721 890 007**	0.020		1 ¼	36	24
*	32	16	**721 890 008**	0.030		1 ½	41	26
*	40	16	**721 890 009**	0.049		2	53	29
*	50	16	**721 890 010**	0.087		2 ¼	59	34
*	63	16	**721 890 011**	0.138		2 ¾	74	38
	75	10	**721 890 012**	0.256	Tr 108x5		92	40
	90	10	**721 890 013**	0.490	Tr 128x5		110	43
***	90	10	**721 890 023**	0.355	Tr 128x5		105	43
	110	10	**721 890 014**	0.574	Tr 154x6		133	48
**	75		**198 806 429**	0.200				

Exchange kit

Model:

- Exchange kit consisting of: guiding rod (PVDF/V4A), insert guiding rod and insert bottom
- Only for DN50 (1'500 - 15'000 l/h) and DN65 (all scale ranges)

d (mm)	Size (inch)	DN (mm)	Scale range (l/h)	Code
63	2	50	1500 - 15000	**198 350 895**
75	2 ½	65	2000 - 20000	**198 350 896**
75	2 ½	65	3000 - 30000	**198 350 896**
75	2 ½	65	8000 - 80000	**198 350 896**

Variable area flow meter type 335

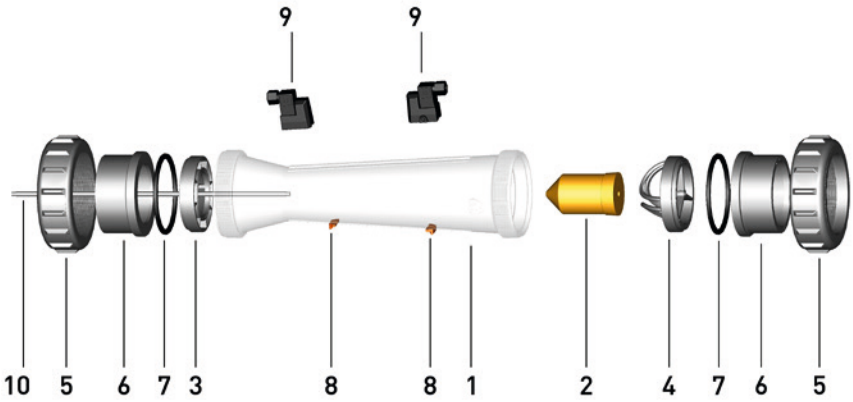

Taper tube with water scale (1)

- PVC-U transparent

d (mm)	Size (inch)	DN (mm)	Scale range (l/h)	PVC-U transparent Code	Polyamid Code	Polysulfon Code
32	1	25	50 - 500	**198 335 055**	**198 335 070**	**198 335 085**
32	1	25	100 - 1000	**198 335 056**	**198 335 071**	**198 335 086**
40	1 ¼	32	150 - 1500	**198 335 057**	**198 335 072**	**198 335 087**
40	1 ¼	32	250 - 2500	**198 335 058**	**198 335 073**	**198 335 088**
50	1 ½	40	200 - 2000	**198 335 059**	**198 335 074**	**198 335 089**
50	1 ½	40	300 - 3000	**198 335 060**	**198 335 075**	**198 335 090**
50	1 ½	40	600 - 6000	**198 335 061**	**198 335 076**	**198 335 091**
63	2	50	600 - 6000	**198 335 062**	**198 335 077**	**198 335 092**
63	2	50	1000 - 10000	**198 335 063**	**198 335 078**	**198 335 093**
63	2	50	1500 - 15000	**198 335 064**	**198 335 079**	**198 335 094**
75	2 ½	65	2000 - 20000	**198 335 065**	**198 335 080**	**198 335 095**
75	2 ½	65	3000 - 30000	**198 335 066**	**198 335 081**	**198 335 096**
75	2 ½	65	8000 - 60000	**198 335 067**	**198 335 082**	**198 335 097**

Taper tube without scale (1)

Scale range (l/h)	d (mm)	Size (inch)	DN (mm)	PVC-U transparent Code	Polyamid Code	Polysulfon Code
50 - 500	32	1	25	**198 335 255**	**198 335 270**	**198 335 285**
100 - 1000	32	1	25	**198 335 256**	**198 335 271**	**198 335 286**
150 - 1500	40	1 ¼	32	**198 335 257**	**198 335 272**	**198 335 287**
250 - 2500	40	1 ¼	32	**198 335 258**	**198 335 273**	**198 335 288**
200 - 2000	50	1 ½	40	**198 335 259**	**198 335 274**	**198 335 289**
300 - 3000	50	1 ½	40	**198 335 260**	**198 335 275**	**198 335 290**
600 - 6000	50	1 ½	40	**198 335 261**	**198 335 276**	**198 335 291**
600 - 6000	63	2	50	**198 335 262**	**198 335 277**	**198 335 292**
1000 - 10000	63	2	50	**198 335 263**	**198 335 278**	**198 335 293**
1500 - 15000	63	2	50	**198 335 264**	**198 335 279**	**198 335 294**
2000 - 20000	75	2 ½	65	**198 335 265**	**198 335 280**	**198 335 295**
3000 - 30000	75	2 ½	65	**198 335 266**	**198 335 281**	**198 335 296**
8000 - 60000	75	2 ½	65	**198 335 267**	**198 335 282**	**198 335 297**

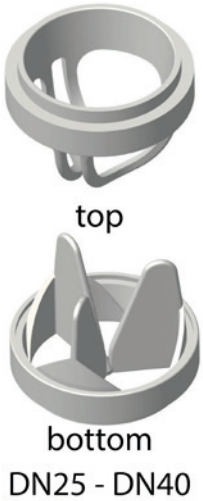

Insert PVDF (3,4)

d (mm)	Size (inch)	DN (mm)	Scale range (l/h)	top (4) Code	bottom (3) Code
32	1	25	50 - 500	**198 335 970**	**198 335 977**
40	1 ¼	32	150 - 1500, 250 - 2500	**198 335 971**	**198 335 978**
50	1 ½	40	200 - 2000, 300 - 3000, 600 - 6000	**198 335 972**	**198 335 979**
63	2	50	600-6000, 1000-10000, 1500-15000	**199 335 974**	**198 335 893**
75	2 ½	65	2000-20000, 3000-30000, 8000-60000	**199 335 975**	**198 335 894**

Float PVDF (2)

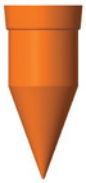

DN40

DN50

DN65

d (mm)	Size (inch)	DN (mm)	Scale range (l/h)
32 - 40	1 - 1 ¼	25 - 32	50 - 500 / 100 - 1000 / 150 - 1500 / 250 - 2500
50	1 ½	40	200 - 2000 / 300 - 3000 / 600 - 6000
63	2	50	600 - 6000 / 1000 - 10000 / 1500 - 15000
75	2 ½	65	2000 - 20000 / 3000 - 30000
75	2 ½	65	8000 - 60000

Without magnet Code	With magnet (bistabil) Code
198 335 455	**198 335 470**
198 335 457	**198 335 471**
198 335 458	**198 335 472**
198 335 459	**198 335 473**
199 335 460	**199 335 474**

Guiding rod (10)

d (mm)	Size (inch)	Scale range (l/h)	PVDF Code
63	2	600-6000, 1000-10000, 1500-15000	**198 335 984**
75	2 ½	2000-20000, 3000-30000, 8000-60000	**198 335 984**

Insert guiding rod PVDF (for 10)

d (mm)	Size (inch)	DN (mm)	Scale range (l/h)	Code
63	2	50	600-6000, 1000-10000, 1500-15000	**198 335 953**
75	2 ½	65	2000-20000, 3000-30000, 8000-60000	**198 335 954**

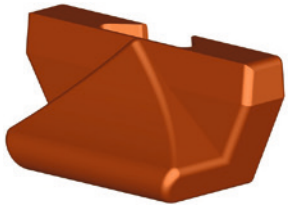

Flow value indicator PS (8)

Model:

- For all dimensions type 335/350

d (mm)	Size (inch)	DN (mm)	Flow value indicator Code
32	1	25	**198 335 990**
40	1 ¼	32	**198 335 990**
50	1 ½	40	**198 335 990**
63	2	50	**198 335 990**
75	2 ½	65	**198 335 990**

O-rings (7)

d (mm)	Size (inch)	DN (mm)	EPDM Code	FKM Code
32	1	25	**748 410 008**	**749 410 008**
40	1 ¼	32	**748 410 009**	**749 410 009**
50	1 ½	40	**748 410 010**	**749 410 010**
63	2	50	**748 410 011**	**749 410 011**
75	2 ½	65	**748 410 014**	**749 410 014**

Exchange kit

Model:

- Exchange kit consisting of: guiding rod (PVDF/V4A), insert guiding rod and insert bottom
- Only for DN50 (1'500 - 15'000 l/h) and DN65 (all scale ranges)

d (mm)	Size (inch)	DN (mm)	Scale range (l/h)	Code PVDF Code
63	2	50	1500 - 15000	**198 335 895**
75	2 ½	65	2000 - 20000	**198 335 896**
75	2 ½	65	3000 - 30000	**198 335 896**
75	2 ½	65	8000 - 80000	**198 335 896**

Spare part for variable area flow meter SK50-SK73/SK500-SK730

Short version taper tube Polysulfone

- without scale

d (mm)	DN (mm)	Type	Code
16	10	SK 50 / 500	**198 801 341**
16	10	SK 51 / 510	**198 801 342**
16	10	SK 52 / 520	**198 801 343**
20	15	SK 60 / 600	**198 801 449**
20	15	SK 61 / 610	**198 801 450**
20	15	SK 62 / 620	**198 801 451**
32	25	SK 70 / 700	**198 801 445**
32	25	SK 71 / 710	**198 801 338**
32	25	SK 72 / 720	**198 801 339**
32	25	SK 73 / 730	**198 801 340**

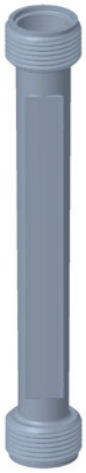

Short version taper tube PVC-U transparent

- without scale

d (mm)	DN (mm)	Type	Code
16	10	SK 50 / 500	**198 803 790**
16	10	SK 51 / 510	**198 803 791**
16	10	SK 52 / 520	**198 803 792**
20	15	SK 60 / 600	**198 803 793**
20	15	SK 61 / 610	**198 803 794**
20	15	SK 62 / 620	**198 803 795**
32	25	SK 70 / 700	**198 803 796**
32	25	SK 71 / 710	**198 803 797**
32	25	SK 72 / 720	**198 803 798**
32	25	SK 73 / 730	**198 803 799**

Short version float PVDF
Without magnet

d (mm)	DN (mm)	Type	Code
16	10	SK 50 / 51 / 52	**198 806 219**
20	15	SK 60 / 61 / 62	**198 806 220**
32	25	SK 70 / 71 / 72 / 73	**198 806 221**

Short version float PVDF
With magnet bistable

d (mm)	DN (mm)	Type	Code
16	10	SK 500 / 510 / 520	**198 806 222**
20	15	SK 600 / 610 / 620	**198 806 223**
32	25	SK 700 / 710 / 720 / 730	**198 806 224**

Short version float PTFE
Without magnet

d (mm)	DN (mm)	Type	Code
32	25	SK 73	**198 807 166**

Short version top insert PVDF

d (mm)	DN (mm)	Type	Code
16	10	SK 50 / 500; 51 / 510; 52 / 520	**198 807 188**
20	15	SK 60 / 600; 61 / 610; 62 / 620	**198 807 187**
32	25	SK 70 / 700; 71 / 710; 72 / 720; 73 / 730	**198 807 182**

Spare parts solenoid valve type 157

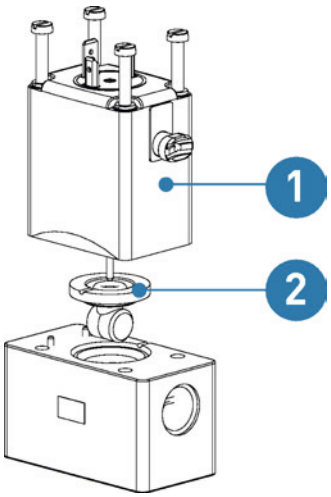

Wear part set (2)
For solenoid valve type 157

e.g. diaphragm

EPDM Code	FKM Code
198 808 012	**198 808 013**

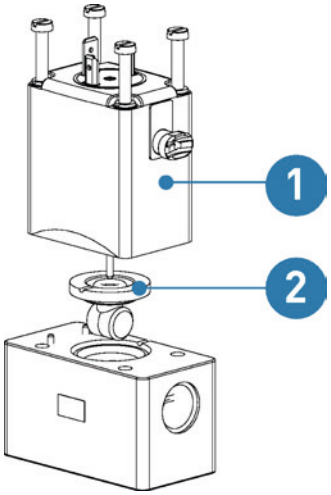

Coil set (1)
For solenoid valve type 157

Voltage	Function	EPDM Code	FKM Code
24V DC	A		**198 808 006**
24V UC	A	**198 808 002**	
230V AC	A	**198 808 004**	

Spare parts solenoid valve type 160/161

Wear part set (3)
For solenoid valve type 160/161

Model:

- Pre-assembled set with angle flange
- Set already pre-lubricated
- Manual override included

d (mm)	DN (mm)	EPDM Code	FKM Code
16	10	**198 808 023**	**198 808 026**
20	15	**198 808 024**	**198 808 027**
25	20	**198 808 025**	**198 808 028**

Actuator Set (2)
For solenoid valve type 160/161

Model:

- Including core and pressure spring

Function	UC Code	50Hz Code
A	198 808 017	198 808 021
B	198 808 018	
E	198 808 019	
F	198 808 020	198 808 022

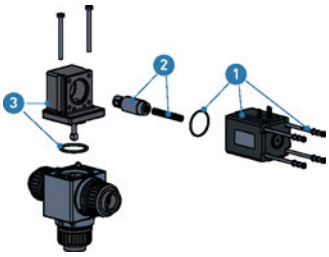

Coil set (1)
For solenoid valve type 160/161

24V UC Code	230 V UC Code	230 V/ 50Hz Code
198 808 014	198 808 015	198 808 016

Spare parts solenoid valve type 166

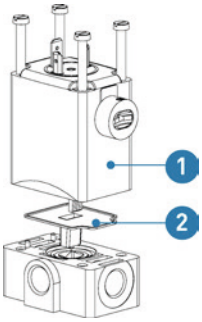

Wear part set (2)
For solenoid valve type 166

e.g. diaphragm

EPDM Code	FKM Code
198 808 053	198 808 054

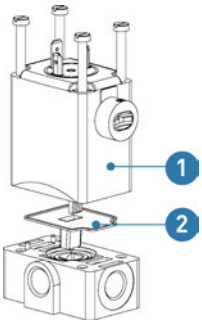

Coil set (1)
For solenoid valve type 166

Function	Voltage	FKM Code
C	24V UC	198 808 049

Spare parts solenoid valve type 165

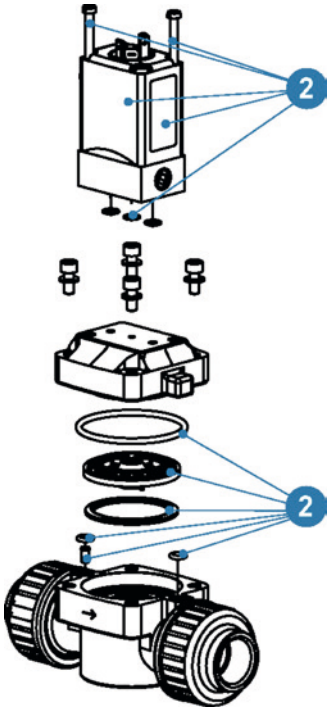

Wear part set (2)
For solenoid valve type 165

d-d (mm)	DN-DN (mm)	EPDM Code	FKM Code
20 - 25	15 - 20	**198 808 035**	**198 808 038**
32 - 40	25 - 32	**198 808 036**	**198 808 039**
50 - 63	40 - 50	**198 808 037**	**198 808 040**

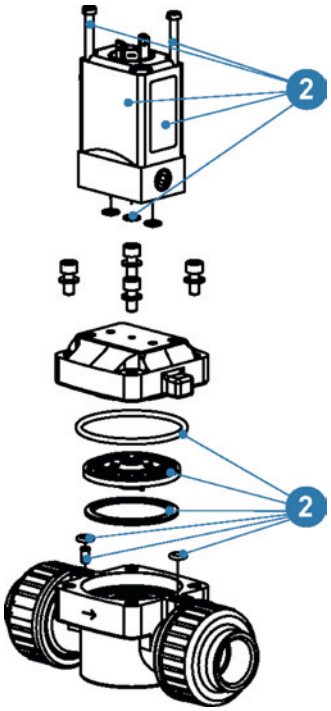

Coil set (1)
For solenoid valve type 165

Voltage	EPDM Code	FKM Code
24V DC	**198 808 029**	**198 808 032**
230V AC	**198 808 030**	**198 808 033**
110V AC	**198 808 031**	**198 808 034**

Pressure regulating valve type 582/586

Cartridge type 582

DN (mm)	PVC-U EPDM Code	PVC-U FKM Code	PVC-C EPDM Code	PVC-C FKM Code	PP-H EPDM Code	PP-H FKM Code
10-15	**161 489 131**	**161 489 231**	**163 489 131**	**163 489 231**	**167 489 131**	**167 489 231**
20-25	**161 489 133**	**161 489 233**	**163 489 133**	**163 489 233**	**167 489 133**	**167 489 233**
32-50	**161 489 136**	**161 489 236**	**163 489 136**	**163 489 236**	**167 489 136**	**167 489 236**

DN (mm)	PVDF FKM Code	PVDF HP FKM Code
10-15	**185 489 131**	**180 489 131**
20-25	**185 489 133**	**180 489 133**
32-50	**185 489 136**	**180 489 136**

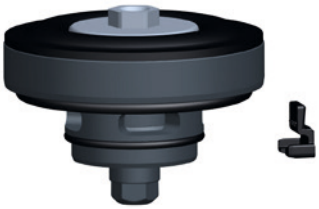

Cartridge type 586

DN (mm)	PVC-U EPDM Code	PVC-U FKM Code	PVC-C EPDM Code	PVC-C FKM Code	PP-H EPDM Code	PP-H FKM Code
10-15	**161 489 161**	**161 489 261**	**163 489 161**	**163 489 261**	**167 489 161**	**167 489 261**
20-25	**161 489 163**	**161 489 263**	**163 489 163**	**163 489 263**	**167 489 163**	**167 489 263**
32-50	**161 489 166**	**161 489 266**	**163 489 166**	**163 489 266**	**167 489 166**	**167 489 266**

DN (mm)	PVDF FKM Code	PVDF-HP FKM Code
10-15	**185 489 161**	**180 489 161**
20-25	**185 489 163**	**180 489 163**
32-50	**185 489 166**	**180 489 166**

Cover cap

DN (mm)	Type	Code
10-15	582/586	**198 806 391**
20-25	582/586	**198 806 393**
32-50	582/586	**198 806 396**

SYGEF Standard Manometer Adapter
For pressure regulating valves type 582/586

Model:

- Material: PVDF
- For media separation from pressure gauge to process medium
- PTFE/EPDM Manometer diaphragm
- *EPDM and FKM O-Ring included in Set

DN (mm)	EPDM/FKM Code	FKM white (HP) Code
10-50	**198 806 650**	**198 806 654**

Manometer
For pressure regulating valves type 582/586

Model:

- Display with double scale: 0-4 bar / 0-58 psi, size: ø 40mm
- Display with double scale: 0-10bar / 0-150psi, size: ø 40mm
- Connection G 1/4 center back mount

DN (mm)	Material	EPDM/FKM 0-10bar Code	FKM white (HP) 0-10bar Code	EPDM/FKM 0-4bar Code
10-50	Brass	**198 806 651**	**198 806 655**	**198 806 963**
10-50	Stainless Steel	**198 806 652**	**198 806 656**	**198 806 962**

Manometer plug
For pressure regulating valves type 582/586

- For maintenance

DN (mm)	Code
10-50	**198 806 653**

Hook wrench

DN (mm)	Type	Code
10-15	582/586	**198 806 451**
20-25	582/586	**198 806 452**
32-50	582/586	**198 806 453**

Pressure reducing valve type V182/82

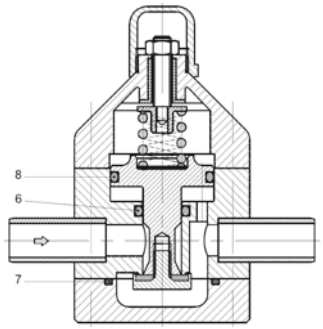

Model:

- Spare part kit contains: diaphragm and o-rings

Type	DN-DN (mm)	EPDM Code	FKM Code	PTFE Code
V182	10 - 15	**700 254 285**	**700 254 289**	
V182	20 - 25	**700 254 286**	**700 254 290**	
V182	32 - 40	**700 254 287**	**700 254 291**	
V182	50	**700 254 288**	**700 254 292**	
V82	65	**700 254 404**		**700 254 308**
V82	80	**700 254 405**		**700 254 309**
V82	100	**700 254 406**		**700 254 310**

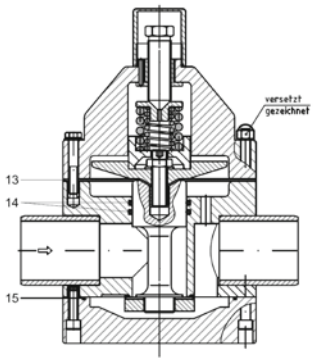

Pressure reducing valve type V782

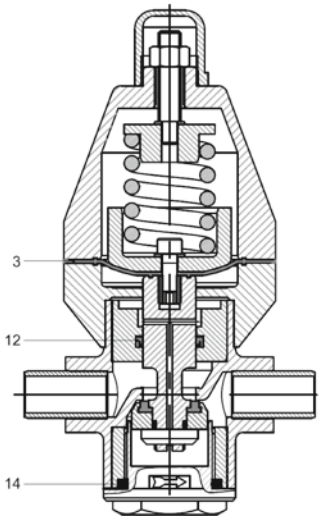

Model:

- Spare part kit contains: diaphragm and o-rings

Type	DN-DN (mm)	EPDM Code	PTFE Code
V782	10 - 15	**700 254 318**	**700 254 321**
V782	20 - 25	**700 254 319**	**700 254 322**
V782	32 - 40	**700 254 320**	**700 254 323**

Pressure relief valve type V185/85

Model:

- Spare part kit contains: diaphragm

Type	DN-DN (mm)	EPDM Code	PTFE Code
V185	10 - 20	**700 254 333**	**700 254 339**
V185	25 - 32	**700 254 334**	**700 254 340**
V185	40 - 50	**700 254 335**	**700 254 341**
V85	65	**700 254 336**	**700 254 342**
V85	80	**700 254 337**	**700 254 343**
V85	100	**700 254 338**	**700 254 344**

Pressure retaining valve type V186/86

Model:

- Spare part kit contains: diaphragm

Type	DN-DN (mm)	EPDM Code	PTFE Code
V185/186	10 - 20	**700 254 333**	**700 254 339**
V185/186	25 - 32	**700 254 334**	**700 254 340**
V185/186	40 - 50	**700 254 335**	**700 254 341**
V86	65	**700 254 376**	**700 254 379**
V86	80	**700 254 377**	**700 254 380**
V86	100	**700 254 378**	**700 254 381**

Pressure retaining valve type V786

Model:

- Spare part kit contains: diaphragm

Type	DN-DN (mm)	EPDM Code	PTFE Code
V786	10 - 15	**700 254 389**	**700 254 392**
V786	20 - 25	**700 254 390**	**700 254 393**
V786	32 - 40	**700 254 391**	**700 254 394**

General Condition of Supply of Georg Fischer Piping Systems Limited, Schaffhausen

1 General

1.1 These General Conditions shall apply to all Products supplied by Georg Fischer Piping Systems Limited («Georg Fischer») to the Purchaser.
They shall also apply to all future business even when no express reference is made to them.

1.2 Any deviating or supplementary conditions especially Purchaser's general conditions of purchase and verbal agreements shall only be applicable if accepted in writing by Georg Fischer.

1.3 The written form shall be deemed to be fulfilled by all forms of transmission, evidenced in the form of text, such as telefax, e-mail, etc.

2 Tenders

Tenders shall only be binding if they contain a specifically stated period for acceptance.

3 Scope of Delivery

3.1 Georg Fischer's product range is subject to change.

3.2 The confirmation of order shall govern the scope and execution of the contract.

4 Data and Documents

4.1 Technical documents such as drawings, descriptions, illustrations and data on dimensions, performance and weight as well as the reference to standards are for information purposes only. They are not warranted characteristics and are subject to change.

4.2 All technical documents shall remain the exclusive property of Georg Fischer and may only be used for the agreed purposes or as Georg Fischer may consent.

5 Confidentiality, Protection of Personal Data

5.1 Each party shall keep in strict confidence all commercial or technical information relating to the business of the other party, of which it has gained knowledge in the course of its dealing with the other party. Such information shall neither be disclosed to third parties nor used for other purposes than those for which the information has been supplied.

5.2 In the context of the contractual relation with the Purchaser personal data may be processed. The Purchaser agrees to the disclosure of said data to third parties such as foreign subcontractors and suppliers etc .

6 Local Laws and Regulations, Export Controls

6.1 The Purchaser shall bring to the attention of Georg Fischer all local laws and regulations at the place of destination which bear connection with the execution of the contract and the adherence to relevant safety regulations and approval procedures.

6.2 In case of re-exports, Purchaser shall be responsible for compliance with pertinent export control regulations.

7 Price

7.1 Unless agreed otherwise, the prices shall be deemed quoted net ex works (according to Incoterms 2010 of the ICC, or latest version) including standard packing. All supplementary costs such as the cost of carriage, insurance, export-, transit- and import- licences etc. shall be borne by the Purchaser. The Purchaser shall also bear the costs of all taxes, fees, duties etc. connected with the contract.

7.2 If the costs of packing, carriage, insurance, fees and other supplementary costs are included in the tender price or contract price or are referred to specifically in the tender or confirmation of order, Georg Fischer reserve the right to revise their prices accordingly should any change occur in the relevant tariffs.

8 Terms of Payment

8.1 The Purchaser shall make payment in the manner agreed by the parties without any deductions such as discounts, costs, taxes or dues.

8.2 The Purchaser may only withhold or off-set payments due against counter claims which are either expressly acknowledged by Georg Fischer or finally awarded to the Purchaser.
In particular, payment shall still be made when unessential items are still outstanding provided that the Products already delivered are not rendered unusable as a result.

9 Retention of Title

9.1 The Products shall remain the property of Georg Fischer until the Purchaser shall have settled all claims, present and future, which Georg Fischer may have against him.

9.2 Should the Purchaser resell Products to which title is reserved, in the ordinary course of business, he shall hereby be deemed to have tacitly assigned to Georg Fischer the proceeds deriving from their sale together with all collateral rights, securities and reservations of title until all claims held by Georg Fischer shall have been settled. Until revoked by Georg Fischer, this assignment shall not preclude Purchaser's right to collect the assigned receivables.

9.3 To the extent the value of the Products to which title is reserved together with collateral securities exceeds Georg Fischer's claims against the Purchaser by more than 20%, Georg Fischer shall re-assign the above proceeds to Purchaser at his request.

10 Delivery

10.1 The term of delivery shall commence as soon as the contract has been entered into, all official formalities such as import and payment permits have been obtained and all essential technical issues have been settled. The term of delivery shall be deemed duly observed when, upon its expiry, the Products are ready for despatch.

10.2 Delivery is subject to the following conditions, i.e. the term of delivery shall be reasonably extended:

a) if Georg Fischer are not supplied in time with the information necessary for the execution of the contract or if subsequent changes causing delays are made by the Purchaser.

b) if Georg Fischer are prevented from performing the contract by force majeure. Force majeure shall equally be deemed to be any unforeseeable event beyond Georg Fischer's control which renders Georg Fischer's performance commercially unpractical or impossible, such as delayed or defective supplies from sub contractors labour disputes, governmental orders or regulations, shortages in materials or energy, serious disturbances in Georg Fischer's works, such as the total or partial destruction of plant and equipment or the breakdown of essential facilities, serious disruptions in transport facilities, e.g. impassable roads.
Should the effect of force majeure exceed a period of six (6) months, either party may cancel the contract forthwith.
Georg Fischer shall not be liable for any damage or loss of any kind whatsoever resulting the refrom, any suspension or cancellation being without prejudice to Georg Fischer's right to recover all sums due in respect of consignments delivered and costs incurred to date.

c) if the Purchaser is in delay with the fulfilment of his obligations under the contract, in particular, if he does not adhere to the agreed conditions of payment or if he has failed to timely provide the agreed securities.

10.3 If for reasons attributable to Georg Fischer the agreed term of delivery or a reasonable extension thereof is exceeded, Georg Fischer shall not be deemed in default until the Purchaser has granted to Georg Fischer in writing a reasonable extension thereof of not less than one (1) month which equally is not met.
The Purchaser shall then be entitled to the remedies provided at law, it being however understood that, subject to limitations of Art. 16, damage claims shall be limited to max. 10% of the price of the delayed delivery.

10.4 Part shipments shall be allowed and Georg Fischer shall be entitled to invoice for such partial deliveries.

10.5 If the Purchaser fails to take delivery within a reasonable time of Products notified as ready for despatch, Georg Fischer shall be entitled to store the Products at the Purchaser's expense and risk and to invoice them as delivered. If Purchaser fails to effect payment, Georg Fischer shall be entitled to dispose of the Products.

10.6 Should Purchaser cancel an order without justification and should Georg Fischer not insist on the performance of the contract, Georg Fischer shall be entitled to a penalty amounting to 10% of the contract price, Georg Fischer's right to prove and claim higher damages remaining reserved. Purchaser shall be entitled to prove, that Georg Fischer has suffered no or a considerably lower damage than the penalty forfeited.

11 Packing

If the Products are provided with additional packing over and above the standard packing, such packing shall be charged additionally.

12 Passing of Risk

12.1 The risk in the Products shall pass to the Purchaser as soon as they have left Georg Fischer's works (EX WORKS, Incoterms 2010 ICC, or latest version), even if delivery is made carriage-paid, under similar clauses or including installation or when carriage is organized and managed by Georg Fischer.

12.2 If delivery is delayed for reasons beyond Georg Fischer's control, the risk shall pass to the Purchaser when he is notified that the Products are ready for despatch.

13 Carriage and Insurance

13.1 Unless agreed otherwise, the Purchaser shall bear the cost of carriage.

13.2 The Purchaser shall be responsible for transport insurance against damage of whatever kind. Even when such insurance is arranged by Georg Fischer it shall be deemed taken out by the order of and for the account of the Purchaser and at his risk.

13.3 Special requests regarding carriage and insurance shall be communicated to Georg Fischer in due time. Otherwise carriage shall be arranged by Georg Fischer at their discretion, but without responsibility, by the quickest and cheapest method possible.
In case of carriage-paid delivery transport arrangements shall be made by Georg Fischer. If the Purchaser specifies particular requirements, any extra costs involved shall be borne by him.

13.4 In the event of damage or loss of the Products during carriage the Purchaser shall mark the delivery documents accordingly and immediately have the damage ascertained by the carrier. Not readily ascertainable damages sustained during carriage shall be notified to the carrier within six (6) days after receipt of the Products.

14 Inspection, Notification of Defects and Damages

14.1 The Products will be subject to normal inspection by Georg Fischer during manufacture. Additional tests required by the Purchaser shall be agreed upon in writing and shall be charged to the Purchaser.

14.2 It shall be a condition of Georg Fischer's obligation under the warranties stated hereinafter that Georg Fischer be notified in writing by the Purchaser of any purported defect immediately upon discovery. Notice concerning weight, numbers or apparent defects is to be given latest within 30 days from receipt of the Products, notice of other defects immediately latest within seven (7) working days after discovery, in any event within the agreed warranty period.

14.3 Purchaser shall not dispose of allegedly defective Products until all warranty and/or damage claims are finally settled. At its request, defective Products are to be placed at Georg Fischer's disposal.

14.4 At its request, Georg Fischer shall be given the opportunity to inspect the defect and/or damage, prior to commencement of remedial work, either itself or by third party experts.

15 Warranty

15.1 At the written request of the Purchaser, Georg Fischer undertakes to repair or replace at its discretion, as quickly as possible and free of charge, all Products supplied which demonstrably suffer from faulty design, materials or workmanship, from faulty operating or installation instructions or which become defective or unusable due to faulty advice.
In order to protect employees from toxic or radioactive substances which may have been transported through defective parts returned to Georg Fischer's sales organisation, said parts must be accompanied by a Material Safety Disclosure Form. The form may be obtained from Georg Fischer's local sales company or via www.piping.georgfischer.com.
Replaced parts shall become property of Georg Fischer, unless Georg Fischer waives such claim.

15.2 For Products which are manufactured to specifications, drawings or patterns supplied by the Purchaser, Georg Fischer's warranty shall be restricted to proper materials and workmanship.

15.3 The Purchaser shall be entitled to rescind the contract or to demand a reduction of the contract price if
- the repair or replacement of the defective Product is impossible
- the defective Product is not repaired or replaced within a reasonable period
- Georg Fischer refuses the repair or replacement or if for reasons attributable to Georg Fischer the repair or replacement is delayed.

15.4 For Products or essential components manufactured by a third party and supplied by Georg Fischer under this contract, Georg Fischer's warranty is limited to the warranty provided by said third party.

15.5 This warranty shall not apply to damage resulting from normal wear and tear, improper storage and maintenance, failure to observe the operating instructions, overstressing or overloading, unsuitable operating media, unsuitable construction work or unsuitable building ground, improper repairs or alterations by the Purchaser or third parties, the use of other than original spare parts and other reasons beyond Georg Fischer's control.

15.6 No action or claim may be brought by the Purchaser on account of any alleged breach of warranty or any other obligation of Georg Fischer after the expiration of twelve (12) months from receipt of the Products by the end user or at the latest within eighteen (18) months of the Products being despatched by Georg Fischer.

15.7 In case of Products for use in domestic installations or in utilities
- Georg Fischer will assume the costs of dismantling the defective Product and restoring the damaged object up to CHF 1'000'000 per occurrence.
- warranty or damage claims - contrary to Section 15.6 – are time-barred five (5) years from the date of installation or seven (7) years from the production date, whichever is earlier.

16 Limitation of Liability

The rights and remedies of the customer shall be exclusively governed by these General Conditions of Supply and shall be in lieu of any remedies at law. All further claims for damages, reduction of the purchase price, termination of or rescission of the contract are excluded.
In no case whatsoever shall the customer be entitled to claim damages other than compensation for costs of remedying defects in the supplies. This in particular refers, but shall not be limited, to loss of production, loss of use, loss of orders, loss of profit, third party recovery claims and other direct or indirect or consequential damages.
This limitation of liability equally applies to the extent Georg Fischer is liable for acts or omissions of its employees or third parties engaged for the performance of its obligations. It does not apply in case unlawful intent or gross negligence on the part of Georg Fischer's management and in case of Georg Fischer's statutory liability, in particular under applicable product liability laws.

17 Severability

Should any term or clause of these General Conditions in whole or in part be found to be unenforceable or void, all other provisions shall remain in full force and effect and the unenforceable or void provision shall be replaced by a valid provision, which comes closest to the original intention of the unenforceable or invalid provision.

18 Place of Performance and Jurisdiction

18.1 Place of performance for the Products shall be the Georg Fischer works from which the Products are despatched.

18.2 The contract shall be governed by Swiss law without regard to conflict of law provisions that would require the application of another law.

18.3 Any civil action based upon any alleged breach of this contract shall be filed and prosecuted exclusively in the courts of Schaffhausen, Switzerland.
Georg Fischer however reserves the right to file actions in any court having jurisdiction over controversies arising out of or in connection with the present contract.

03/2011

+GF+

Local support around the world

Visit our webpage to get in touch with your local specialist:
www.gfps.com/our-locations

The information and technical data (altogether "Data") herein are not binding, unless explicitly confirmed in writing.
The Data neither constitutes any expressed, implied or warranted characteristics, nor guaranteed properties or a guaranteed durability. All Data is subject to modification. The General Terms and Conditions of Sale of Georg Fischer Piping Systems apply.

GFDO_PR_00025a_EN (03.25)
© Georg Fischer Piping Systems Ltd
8201 Schaffhausen/Switzerland, 2025