GF Piping Systems

Signet Specials Catalog

and ordering guide

Specials Catalog and ordering guide

The Specials Catalog provides details of modified standard GF Signet products that meet special needs of specific applications.

In this catalog, we have selected the most popular modified products used throughout the GF Global sales channel. If after your search through this catalog you do not find a product that suits your application needs, please send an email request to the Special Order Product Manager at signet-specialproduct@georgfischer.com

How to Order Special Products

GF Sales companies must order Special Order products directly from GF Signet. All quotes issued will have important reference information which must be submitted to the GF Signet Customer Service department when issuing an order.
(See example below).

SAP Material: 150 301 002
Quote Number: Q15020 001
Part Number: 3-2774-HT
Description: pH electrode, high temperature with ¾" NPT process connector
List price USD (in US dollars)
NET iLab Charge: $90.00

Quote is good until the end of 2017 or unless specified.

List price ranges are provided for budgetary purpose; however, the factory should be contacted for final net quotations which will be valid for all orders placed prior to year end 2017. A separate NET iLab charge may be added to the Special Order product. See price sheet or contact the factory for specific information.

When contacting GF Signet for a quote on a Special Order product, it's important to provide the full Special Order part number to avoid any confusion. ALL Special Order products can NOT be returned for credit.

After receiving the initial request, we will provide a quote within two working days via email.

The quote will include list price, lead-time and a quote expiration date. If the product is not ordered prior to the expiration date, product must be re-quoted.
If you need a modified version of a product listed in this catalog, or have a request for a new product, please contact the Special Order Product Manager. We advise to include all relevant application information.

You can use the Application Assistance Form located:
1) On the last page of this catalog
2) On our website using the link below:
http://www.gfps.com/content/gfps/country_US/en_US/service_and_support/application.html

All GF Sales companies are required to contact the GF Signet Office.
Simply send an email request to order special products directly to the Signet Customer Service representative or the Signet Special Order Product Manager at signet-specialproduct@georgfischer.com

Special Order products can NOT be ordered through the GF SAP system. These products are not standard products, SAP part numbers will not be assigned to them. All orders must be manually prepared by your Purchasing/Logistic Manager.

All information and specifications contained in this catalog are subject to change without notice. Corporate trademarks and logos stated herein are the property of their respective companies. All rights reserved. Copyright © 2016 Georg Fischer Signet LLC

Terms and Conditions

Please read the following very carefully:

- Special Order products must be ordered directly from GF Signet only.
- Price is issued as a list price, your standard GF Signet discount will be applied.
- Lead-time for Special Order products is 4 to 6 weeks. (The 3-2774 family sensors could have extended lead-times of up to 9 weeks).
- All Special Order product orders must be accompanied with a:
  - Non-cancellable Purchase Order
  - Reference the SAP Material
  - Quote Number
- Sales Companies are responsible for all freight charges to the final destination.
- All Special order products can NOT be returned for credit.
- Special Order products are not guaranteed to meet all standard part specifications. Verification testing of "special modifications" to determine conformance can be performed, and will be quoted upon request by the customer. To perform such a conformance test, specific requirements of fluid type and conditions of the media and piping system must be specified. Without this information, a determination of the time required and associated non-recurring testing cannot be determined. If testing is not performed, buyer agrees to accept the product as-is. The buyer will be responsible for any consequential damages due to suitability of use and installation of the provided products.

Special OEM Support:

GF Signet can package your OEM's system products in to a single package. This allows the customer to use one part number to receive an OEM system in one box avoiding ordering separate part numbers.

The contents in this publication are based on information available at the time of publication. In view of the possibility of human error, we accept no responsibility for any errors or omissions in this publication. The technical data is not binding and may be subject to modification. It neither provides a guarantee of product performance and durability nor constitutes coverage under warranty. In case of doubt or uncertainty, we strongly recommend consultation with the factory.

SAP Material Number 150 301 001

Flow >>

The Model 515 and 2536 sensors are offered in a variety of materials for a wide range of pipe sizes and insertion configurations. The many material choices including PP and PVDF make this model highly versatile and chemically compatible to many liquid process solutions. Sensors can be installed in DN15 to DN900 (½ to 36 in.) pipes.

Also available for Wet-Tap sensors - contact the factory.

Refer to the Signet Measurement and Control Product Catalog for additional information.

PVDF Sensor body assembly built with a combination of PVC and PVDF material. Material in contact with liquid is PVDF.

**PVDF only available in X0 and X1 lengths.

Choose: P51530-XXXX-XXX-X OR 3-2536-XXXX-XXX-X

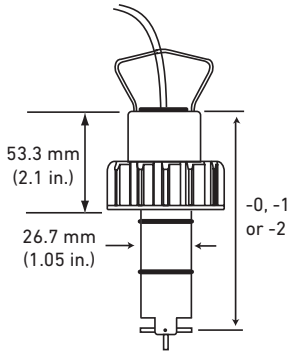

-0 = 104 mm (4.1 in.)
-1 = 137 mm (5.4 in.)
-2 = 213 mm (8.4 in.)

Sensor Body Material	
1	Black Polypropylene
2	PVDF

Rotor Material		Signet Accessory Reference
1	Black PVDF	198 820 052
2	Natural PVDF	159 000 272
3	ETFE	159 000 273
4	Sleeved Black PVDF	198 820 056
5	Sleeved Natural PVDF	198 820 057
6	Sleeved ETFE	198 820 058

Pin Material		
1	Titanium	198 801 182
2	Hastelloy-C	198 801 183
3	Stainless Steel	198 820 015
4	Tantalum	198 820 014
5	Ceramic	198 820 016
6	Natural PVDF*	159 500 049

O-ring Material		
1	FPM	198 801 000
2	EPR (EPDM)	198 820 006
3	FFKM	198 820 007

-	Cable Length
025	7.6 m (25 ft)
050	15.2 m (50 ft)
075	22.8 m (75 ft)
100	30.5 m (100 ft)

-	Sensor Length
0	DN15 to DN100 (0.5 to 4 in.)
1	DN125 to DN200 (5 to 8 in.)
2	DN250 to DN900 (10 to 36 in.)

*Only available with Natural PVDF Rotors
**PVDF only available in X0 and X1 lengths

Example Part Number

P51530-2231-025-1

Paddlewheel sensor, PVDF body, Natural PVDF Rotor, Stainless Steel pin, FPM O-ring, 7.6 m (25 ft) cable for a DN125 to DN200 (5 in. to 8 in.) pipe.

General		
Operating Range		
P51530	0.3 to 6 m/s	1 to 20 ft/s
2536	0.1 to 6 m/s	0.3 to 20 ft/s
Pipe Size Range	DN15 to DN900	½ to 36 in.
Linearity	±1% of max. range @ 25 °C (77 °F)	
Repeatability	±0.5% of max. range @ 25 °C (77 °F)	
Cable Length	7.6 m (25 ft) can be extended up to 60 m (200 ft) maximum	
Max. Temperature/Pressure Ratings		
PP	12.5 bar @ 20 °C	181 psi @ 68 °F
	1.7 bar @ 90 °C	25 psi @ 194 °F
PVDF	14 bar @ 20 °C	203 psi @ 68 °F
	1.4 bar @ 100 °C	20 psi @ 212 °F

Operating Temperature			
PP - 515	-18 °C to 90 °C	0 °F to 194 °F	
2536	-18 °C to 85 °C	0 °F to 185 °F	
PVDF - 515	-18 °C to 100 °C	0 °F to 212 °F	
2536	-18 °C to 85 °C	0 °F to 185 °F	
Shipping Weight			
P51530-X0 / 3-2536-X0	0.454 kg	1.00 lb	
P51530-X1 / 3-2536-X1	0.476 kg	1.05 lb	
P51530-X2 / 3-2536-X2	0.680 kg	1.50 lb	
Standards and Approvals			
CE, FCC (2536)			
RoHS compliant, China RoHS			
Manufactured under ISO 9001 for Quality and ISO 14001 for Environmental Management and OHSAS 18001 for Occupational Health and Safety			

Special order products may not meet all of the specifications of the standard sensor assemblies.

SAP Material Number 150 301 001

Flow >>

The Model 8510 and 8512 sensors are offered in a variety of materials for a wide range of pipe sizes and insertion configurations. The many material choices including PP and PVDF make this model highly versatile and chemically compatible to many liquid process solutions.

Both the Integral Adapter Kit (3-8051) and a Field Mount Transmitter (3-8150-1 or 3-9900-1) are required (sold separately), or can be ordered fully assembled (See page 25).

Refer to the Signet Measurement and Control Product Catalog for additional information.

PVDF Sensor body assembly built with a combination of PVC and PVDF material. Material in contact with liquid is PVDF. PVDF only available in X0 and X1 lengths.

Choose: 3-8510-XXXX-X OR 3-8512-XXXX-X

Sensor Body Material	
1	Black Polypropylene
2	PVDF

Rotor Material		Signet Accessory Reference
1	Black PVDF	198 801 181
2	Natural PVDF	159 500 304
3	ETFE	198 820 018
4	Sleeved Black PVDF	198 820 059
5	Sleeved Natural PVDF	198 820 060
6	Sleeved ETFE	198 820 017

Pin Material		
1	Titanium	198 801 182
2	Hastelloy-C	198 801 183
3	Stainless Steel	198 820 015
4	Tantalum	198 820 014
5	Ceramic	198 820 016
6	Natural PVDF*	159 500 049

O-ring Material		
1	FPM	198 801 000
2	EPR (EPDM)	198 820 006
3	FFKM	198 820 007

-	Sensor Length**	
	0	DN15 to DN100 (0.5 to 4 in.)
	1	DN125 to DN200 (5 to 8 in.)

*Only available with Natural PVDF Rotors
**Sensor length 1 not available in PVDF

Shown with the 9900-1 and 8051

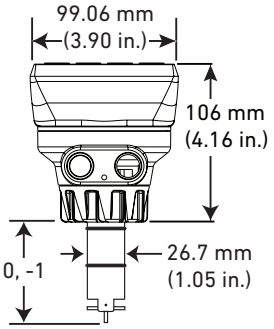

-0 = 152 mm (6.0 in.)
-1 = 185 mm (7.3 in.)

Example Part Number

3-8510-1352-1

Integral paddlewheel sensor, PP body, ETFE Rotor, Ceramic pin, EPR (EPDM) O-ring, for a DN125 to DN200 (5 in. to 8 in.) pipe.

8510 Sensor

General			
Operating Range, 8510		0.3 to 6 m/s	1 to 20 ft/s
Pipe Size Range		DN15 to DN900	½ to 36 in.
Linearity		±.01% of max. range @ 25 °C (77 °F)	
Repeatability		±0.5% of max. range @ 25 °C (77 °F)	
Cable Length		7.6 m (25 ft) can be extended up to 60 m (200 ft) maximum	
Max. Temperature/Pressure Rating - Standard and Integral Sensor			
	PP	12.5 bar @ 20 °C	181 psi @ 68 °F
		1.7 bar @ 90 °C	25 psi @ 194 °F
	PVDF	14.0 bar @ 20 °C	203 psi @ 68 °F
		1.4 bar @ 100 °C	20 psi @ 212 °F
Operating Temperature			
	PP	-18 °C to 90 °C	0 °F to 194 °F
	PVDF	-18 °C to 100 °C	0 °F to 212 °F
Shipping Weight			
	3-8510-X0	0.23 kg	0.50 lb
	3-8510-X1	0.23 kg	0.50 lb
Standards and Approvals			
	RoHS compliant, China RoHS		
	Manufactured under ISO 9001 for Quality and ISO 14001 for Environmental Management and OHSAS 18001 for Occupational Health and Safety		

8512 Sensor

General			
Operating Range, 8512		0.1 to 6 m/s	0.3 to 20 ft/s
Pipe Size Range		DN15 to DN900	½ to 36 in.
Linearity		±1.0% of max. range @ 25 °C (77 °F)	
Repeatability		±0.5% of max. range @ 25 °C (77 °F)	
Cable Length		7.6 m (25 ft) can be extended up to 60 m (200 ft) maximum	
Max. Temperature/Pressure Ratings			
	PP	12.5 bar @ 20 °C	180 psi @ 68 °F
		1.7 bar @ 85 °C	25 psi @ 185 °F
	PVDF	14 bar @ 20 °C	200 psi @ 68 °F
		1.7 bar @ 85 °C	25 psi @ 185 °F
Operating Temperature			
	PP	-18 °C to 85 °C	0 °F to 185 °F
	PVDF	-18 °C to 85 °C	0 °F to 185 °F
Shipping Weight			
	3-8512-X0	0.454 kg	1.00 lb
	3-8512-X1	0.476 kg	1.05 lb
Standards and Approvals			
	CE, FCC		
	RoHS compliant, China RoHS		
	Manufactured under ISO 9001 for Quality and ISO 14001 for Environmental Management and OHSAS 18001 for Occupational Health and Safety		

Special order products may not meet all of the specifications of the standard sensor assemblies.

SAP Material Number 150 301 001

Flow >>

3-2552-4X-XXS

	Process Connector
1	1 in. NPT
2	1 in. ISO

-	Output Type
11S	Digital (S^3L)/Freq. Output
12S	4 to 20 mA Output

Example Part Number

3-2552-41-11S

Submersible Magmeter, 1 in. NPT process connection, Submersible sensor with frequency output and 25 feet of cable.

Extended cables available. Please see page 2 for ordering information.

The Signet 2552 Submersible Metal Magmeter features a sensor manufactured in stainless steel with a PVDF nosepiece, waterproof cable assembly and CPVC waterproof back seal. The 2552 installs quickly into standard 1 in. ISO or NPT outlet and is adjustable to fit pipes up to 32 inches.

The waterproof design allows the sensor to be installed in underwater piping systems at levels up to 4.6 m (15.09 ft).

Select the blind 4 to 20 mA current output to interface directly with data loggers, PLCs or telemetry systems. Key features include empty pipe detection and bidirectional span capability (4 to 20 mA models).

Refer to the Signet Measurement and Control Product Catalog for additional information.

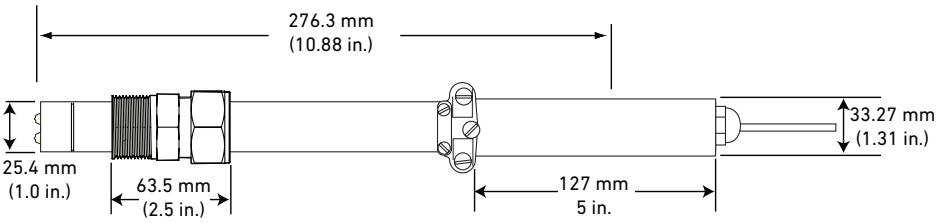

The Signet 0252 Configuration Tool is available to customize every performance feature in the 2552 so it can be adapted to the user's application requirements.

WARNING:
BE CAREFUL INSTALLING THE SENSOR. ONCE THE PROCESS CONNECTOR IS PROPERLY TIGHTENED THE SENSOR CAN NOT BE DISASSEMBLED AND REINSTALLED.

Wetted Materials:		
Body and Electrodes	316L Stainless Steel	
Insulator	PVDF	
Cable	4-cond, rubber cable assembly with NEMA 6P connector, 25 ft standard, custom length available	
Power Requirements		
4 to 20 mA	21.6 to 26.4 VDC, 22.1 mA maximum	
Frequency	4.5 to 26.4 VDC, 15 mA maximum	
Digital (S^3L)	4.5 to 6.5 VDC, 15 mA maximum	
Reverse polarity and short circuit protected		
Performance		
Pipe Size Range	DN40 to DN1200 (1.5 in. to 48 in.)	
Flow Range		
Minimum	0.05 m/s (0.15 ft/s)	
Maximum	10 m/s (33 ft/s) Sensor ships 5 m/s	
Linearity	±(1% reading + 0.01 m/s)	
	±(1% reading + 0.033 ft/s)	
Repeatability	±0.5% of reading @ 25°C	
Min. Conductivity	20 µS/cm	
Electrical		
Frequency output/S^3L compatible with Signet 8900, 9900 and 9950		
Max. Pull-up Voltage	30 VDC	

Short Circuit Protected	≤ 30 V @ 0 Ω pull-up for one hour	
Reverse Polarity Protected	to -40 V for 1 hour	
Overvoltage Protected	to +40 V for 1 hour	
Max. Current Sink	50 mA, current limited	
Maximum cable	300 m (1000 ft)	
Max. Temperature/Pressure Rating		
Storage Temp. (non-icing conditions)	-15 °C to 70 °C	5 °F to 158 °F
Operating Temperature		
Ambient Temp. (non-icing conditions)	-15 °C to 70 °C	5 °F to 158 °F
Media	-15 °C to 85 °C	5 °F to 185 °F
Max. Operating Pressure	20.7 bar @ 25 °C	300 psi @ 77 °F
Shipping Weight		
	2.50 kg	5.51 lb
Standards and Approvals		
CE, FCC		
RoHS Compliant, China RoHS		
NEMA 6P (IP68) (submersible cable models) Signet recommends maximum 3 m (10 ft) submersion depth for maximum 10 days continuous submersion.		
Manufactured under ISO 9001 for Quality, ISO 14001 for Environmental Management and OHSAS 18001 for Occupational Health and Safety.		

Special order products may not meet all of the specifications of the standard sensor assemblies.

SAP Material Number 150 301 001

Flow >>

High Temperature, High Pressure - Boiler package

Signet P525 Metalex Sensor is a high pressure, high temperature paddlewheel sensor. The 316 L stainless steel version is ideal for monitoring boiler feed water and condensate return water.

The corrosion resistant Hastelloy-C version is ideal for desalination processes.

Refer to the Signet Measurement and Control Product Catalog for additional information.

P525-XX-XXX

	Sensor Body / Rotor / Pin Material / Fitting
1	½ - 1 in. Stainless Steel/Stainless Steel/Tungsten/Mini-tap
2	1¼ - 12 in. Stainless Steel/Stainless Steel/Tungsten/ Weld-on Mini-tap
1S	½ - 1 in. Stainless Steel/Stainless Steel/Stainless Steel/ Mini-tap
2S	1½ - 12 in. Stainless Steel/Stainless Steel/Stainless Steel/ Weld-on Mini-tap
2H	1½ - 12 in. Hastelloy-C/Stainless Steel/Stainless Steel/Customer supplied saddle or fitting only

–	Cable Length	
	050	15.2 m (50 ft)
	075	22.8 m (75 ft)
	100	30.5 m (100 ft)

Example Part Number

P525-1S-050

High Temperature, High Pressure flow sensor, ½ - 1 in. Stainless Steel body, Stainless Steel rotor, Stainless Steel pin, with mini-tap fitting, 15.2 m (50 ft) of cable.

P525-1, P525-1S

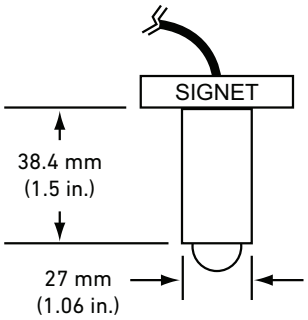

P525-2, P525-2S, P525-2H

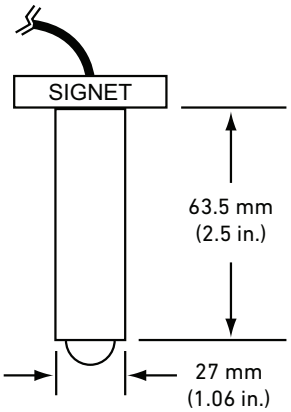

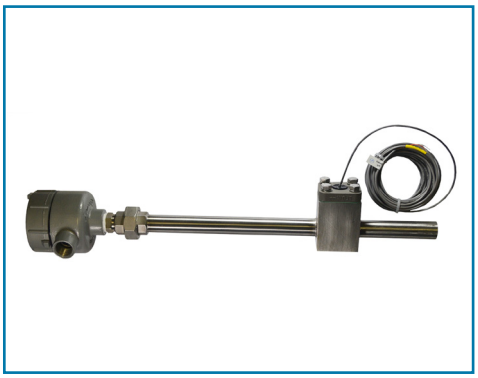

Custom stainless steel manifold available in ¾ inch to 12 inch.

General		
Operating Range	0.5 to 6 m/s	1.6 to 20 ft/s
Pipe Size Range	DN15 to DN300	½ to 12 in.
Wetted Materials		
Sensor Body	316 SS (ACI type CF-8M per ASTM A351), DIN 17440	
Rotor Material	CB7Cu-1 Alloy	
Rotor Pin	Tungsten Carbide GRP 1 or 316 stainless steel	
Retainers (2)	316 stainless steel (1.4401)	
Rotor Bearings (2)	Carbon fiber reinforced PTFE	
Gasket	KLINGER®sil C-4401 (supplied with fitting)	

Max. Temperature/Pressure Rating		
Socket Weld or Weld-On Mini-Tap Fittings	103 bar (1500 psi @ safety factor 1.5) @ 149 °C (300 °F)	
Strap-on Saddle Fitting	21 bar (305 psi) @ 66 °C (151 °F)	
Operating Temperature	-18 °C to 149 °C	0 °F to 300 °F
Shipping Weight		
P525-1/-1S	0.723 kg	1.60 lb
P525-2/-2S	0.774 kg	1.70 lb
Standards and Approvals		
RoHS compliant, China RoHS		
Manufactured under ISO 9001 for Quality and ISO 14001 for Environmental Management and OHSAS 18001 for Occupational Health and Safety		

Special order products may not meet all of the specifications of the standard sensor assemblies.

SAP Material Number 150 301 002

pH/ORP >>

The Wet-Tap sensors allow installation and removal of pH or ORP electrodes, even under process pressure, without the need for process shutdown during routine electrode maintenance and calibration. Automatic process isolation is achieved during electrode retraction with a double O-ring seal on a unique and compact retraction assembly.

A separate valve is not required.

Refer to the Signet Measurement and Control Product Catalog for additional information.

Wet-Tap pH Electrodes

3-2756-WTP-XX

–	Special Feature
HF	Hydrofluoric Acid
LC	Low Conductivity, 0 to 100 µs

Example Part Number

3-2756-WTP-LC

pH Wet-Tap electrode, for Low conductivity applications.

Wet-Tap ORP Electrodes

3-2757-WTP-XX

–	Special Feature
G	Gold Electrode
LC	Low Conductivity, 0 to 100 µs
HDPE-PR	HDPE reference junction for aquariums/salt water

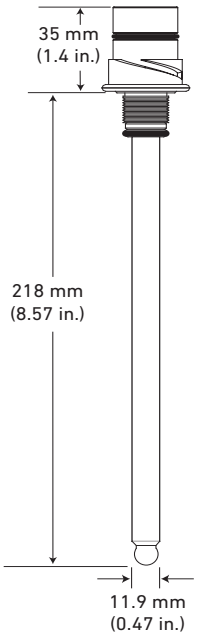

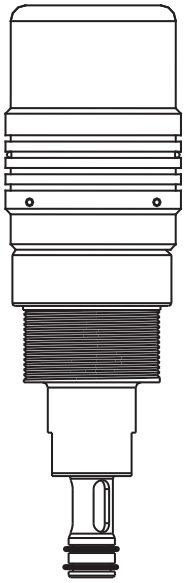

3719 Wet-Tap Assembly
A patented cam-activated automatic locking mechanism, SafeLoc®, and the short stroke design help to assure operator safety. The Wet-Tap assembly can be mounted at any angle and can be used with the Signet DryLoc® Wet-Tap electrodes.

3719 Wet-Tap assembly sold separately

General		
Operating Range	pH	0 to 14 pH
	ORP	Application dependent
Connector	CPVC	DryLoc
Temperature Sensor (pH)	3K Balco for pH	
Reference Junctions	Porous PTFE	
	Electrolyte	Saturated KCl
	Elements	Ag/AgCl
Impedance (pH)	< 150 MΩ @ 25 °C	
Wetted Materials		
Body	glass (bulb) PAS (Polyaryl sulphone)	
Reference Junctions	Porous PTFE	
Sensing Surface	pH	Glass Membrane
	ORP	Platinum

O-rings	FPM	
Connector	CPVC	
Max. Temperature Rating		
Operating Temperature	0 °C to 85 °C	32 °F to 185 °F
Recommended Storage Temperature		
	0 °C to 50 °C	32 °F to 122 °F
The electrode glass will shatter if shipped or stored at temperature below 0 °C (32 °F)		
The performance life of the electrode will shorten if stored at temperatures above 50 °C (122 °F)		
Shipping Weight		
	0.20 kg	0.44 lb
Standards and Approvals		
	Manufactured under ISO 9001 for Quality	

Special order products may not meet all of the specifications of the standard sensor assemblies.

SAP Material Number 150 301 002

pH/ORP >>

Wet-Tap pH/ORP assemblies are ideal for hard to reach applications. Its ¾ in. diameter allows insertion into narrow tank openings, flow lines, and gives greater stability in highly agitated vessels.

Maintenance time is reduced, since there is only one active element to be serviced, and it is readily accessible, requiring no tools for removal.

Application Notes
Wetted materials of construction are 316 stainless steel and CPVC, with double O-ring seals of EPR (EPDM). The outer O-ring absorbs any chemical attack, allowing the inner to provide reliable sealing in a protected environment. A 124 mm (5 in.) long cartridge containing a combination pH or ORP sensor, snaps into the end of the stainless steel body. TC elements are potted in the body itself.

Special only, not in the Signet Measurement and Control Product Catalog. Contact GF Signet for more information.

MK7XX

MK7 Wet-Tap Assembly Complete with Electrode	
21	316 L Stainless Steel Wet-Tap pH Sensor Assembly with 1 in. SS ball valve
23	316 L Stainless Steel Wet-Tap ORP Sensor Assembly with 1 in. SS ball valve

Replacement Electrodes	
P71733-1	pH Replacement Electrodes for MK 721
P72733-1	ORP Replacement Electrodes for MK 723

Example Part Number
MK721
pH Wet-Tap assembly, Stainless Steel with sensor and 1 in. Stainless Steel ball valve.

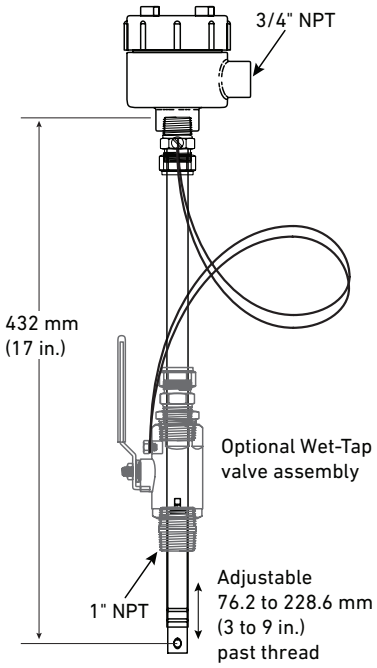

The wet tap electrode can be wired to the 2750 pH/ORP electronics using the 2722 BNC to DryLoc® adapter. See page 18.

2722 BNC to DryLoc® adapter

Max. Temperature/Pressure Rating		
Standard Sensor		100 PSIG @ 100 °C
Sensor Only		with Ball Valve Removed
Valve Assembly		50 PSIG @ All Temperatures
Wetted Materials		
Body		316 Stainless Steel
Sensor	pH	CPVC, PVDF Junction
	ORP	CPVC, PVDF Junction, Platinum pin
O-rings		EPR (EPDM)
Connections		
	Sensor	pH Process ¾ in. NPT
	Valve	1 in. NPT

Electrical		Requires the 3-2722 to connect to pH/ORP electronics.	
Temperature Compensation			
	pH Wet-Tap	3K Balco	
	ORP Wet-Tap	10 KΩ ID Resistor	
Shipping Weight			
	Wet-Tap assembly	2.27 kg	5.0 lb
	pH electrode	0.22 kg	0.49 lb
	ORP electrode	0.22 kg	0.49 lb
Standards and Approvals			
		CE	

Special order products may not meet all of the specifications of the standard sensor assemblies.

SAP Material Number 150 301 002

pH/ORP >>

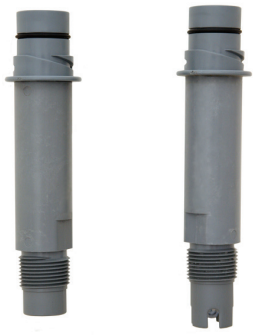

Flat Glass **Protected Bulb**

The Signet 2774-2777 pH and ORP Electrodes feature a unique foul-proof DryLoc® connector with gold-plated contacts designed specifically for use with the Signet 2750 and 2760 preamplifiers, sensor electronics, and connectors.

The high temperature sensors are available for in-line applications and allows the standard preamps and electronics to be used. For hot submersible applications, a cable version of the sensor is available to locate the preamps and electronics safely outside the elevated application temperature.

Refer to the Signet Measurement and Control Product Catalog for additional information.

3-2722 BNC DryLoc Adapter
The 2722 DryLoc adapter is used to connect the Signet high temperature pH and ORP electrodes used in submersible applications to the 2750/2760 electronics.

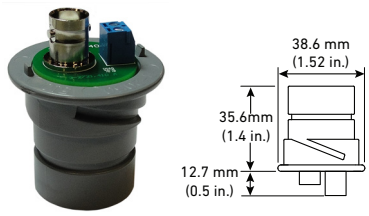

3-277X-XX-X

Electrode	
4	Flat Glass pH
5	Flat ORP
6	Bulb pH with protection
7	Bulb ORP with protection
Special Feature	
HT	High Temperature in-line applications (pH)
HF	Hydrofluoric acid applications <3% (pH)
AU	Gold Electrode (ORP only)
Cable Option	
–	In-line sensor, NPT
C	Cable end for high temperature submersible applications only
ISO	In-line sensor, ISO

Example Part Number
3-2776-HT-C
pH electrode with a protected bulb tip, for High Temperature applications, cable for submersible application.

In-line pipe installation only

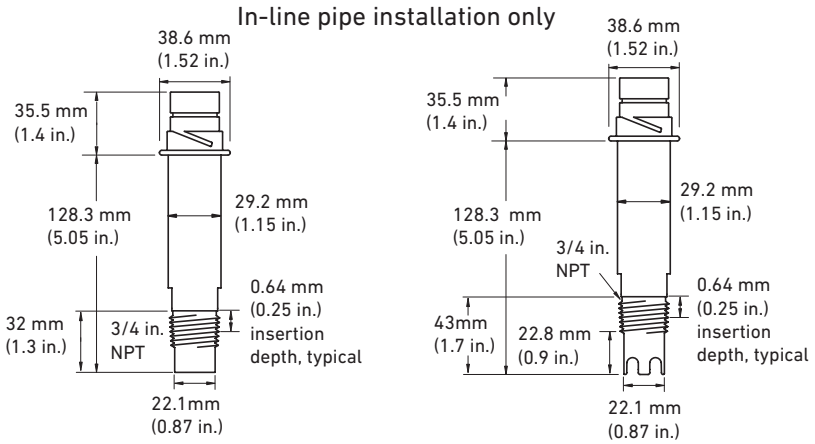

Submersible installation

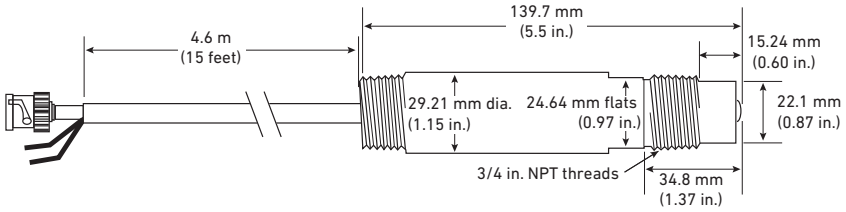

High Temperature, Submersible option requires the 2722 BNC to Dryloc adapter to electronics, see page 16 and 18.

General			
Operating Range	2774/2776	0 to 14 pH	
	2775/2777	±2000 mV (ORP)	
Wetted Materials			
	Body	PPS	
	Reference Junction	PTFE	
	Sensing Surface	pH	Glass membrane
		ORP	Platinum or gold
	O-rings	FPM	
Max. Temperature/Pressure Rating			
Max Temperature	110 °C	230 °F	
Max. Pressure	10 bar	150 psi	
Higher temperature and pressure sensors are available upon request.			

Recommended Storage Temperature		
	0 °C to 50 °C	32 °F to 122 °F
The electrode glass will break if shipped or stored at temperature below 0 °C (32 °F)		
The performance life of the electrode will shorten if stored at temperatures above 50 °C (122 °F)		
Shipping Weight		
	0.25 kg	0.55 lb
Standards and Approvals		
	Manufactured under ISO 9001 for Quality	

Special order products may not meet all of the specifications of the standard sensor assemblies.

SAP Material Number 150 301 002

pH/ORP >>

PVC Wet-Tap pH or ORP sensors assemblies are ideal for hard to reach applications, such as tanks, and high maintenance applications that require more frequent cleaning. Built in temperature element for pH or a 10K ID resistor to allow use with the 3-2750-X smart electronics or the 3-2760-X preamplifiers.

Maintenance time is reduced by easily removing the sensor without process interruption or shut down. The sensor is easily replaced with no tools required.

Wetted material, PVC.

Special only, not in the Signet Measurement and Control Product Catalog. Contact GF Signet for more information.

6-X7XX-XXX

6-2760-WTA	ORP Wet-Tap sensor assembly, PVC (sensor ordered separately)
6-3760-WTA	pH Wet-Tap sensor assembly, PVC (sensor ordered separately)
6-2705-WT	ORP Wet-Tap electrode, general purpose
6-2704-WT	pH Wet-Tap electrode, general purpose

Example Part Number

6-2760-WTA

ORP Wet-Tap assembly. ORP Wet-Tap Sensor sold separately.

Electrode

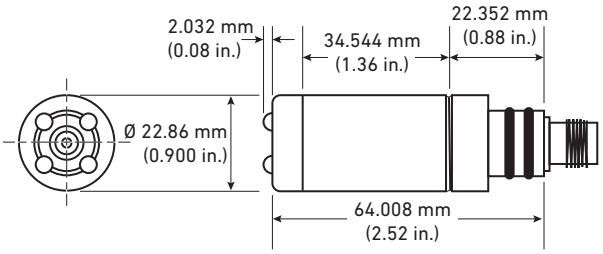

Wet-Tap Assembly

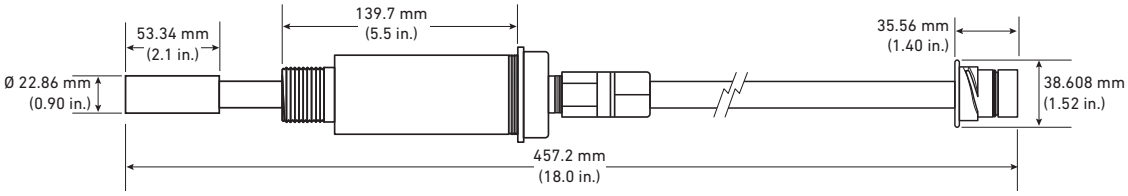

Shipping Weight		
Wet Tap Assembly (without electrode)	0.68 kg	1.50 lb
pH Electrode	0.22 kg	0.49 lb
ORP Electrode	0.22 kg	0.49 lb

Special order products may not meet all of the specifications of the standard sensor assemblies.

SAP Material Number 150 301 003

Conductivity >>

Signet 2819-2821 Conductivity/ Resistivity Electrodes are designed to provide versatile installation and accurate sensing across a very broad dynamic range. These electrodes are built with a controlled surface finish to ensure accuracy and repeatability. The electrodes are with a choice of 4 different materials for maximum chemical compatibility.

A platinum RTD (PT1000) located within the electrode allows optimal temperature sensing.

Refer to the Signet Measurement and Control Product Catalog for additional information.

3-28XX-XXX-XXX

Cell Constant	
19	K = 0.01
20	K = 0.1
21	K = 1.0

–	Sensor Body Material
1	316 Stainless Steel
2	Hastelloy-C 276
3	Titanium
4	Monel

Process Connection	
K	½ in. NPT PVDF
S	½ in. NPT Stainless Steel
P	¾ in. NPT Polypropylene
DS	¾ in. Dual Stainless Steel (To install into 2850 electronics, see page 13)
DT	¾ in. Dual Titanium (To install into 2850 electronics, see page 13)
S1	1 -1½ in. Tri-clamp Stainless Steel*
S2	2 in. Tri-clamp Stainless Steel*
T1	1 -1½ in. Tri-clamp Titanium*
T2	2 in. Tri-clamp Titanium*

O-ring Material	
-	EPR (EPDM) - standard material
1	FPM

-	Cable Length
025	7.6 m (25 ft)
050	15.2 m (50 ft)
075	22.8 m (75 ft)
100	30.5 m (100 ft)

*See 3-2819.606-X, page 13.

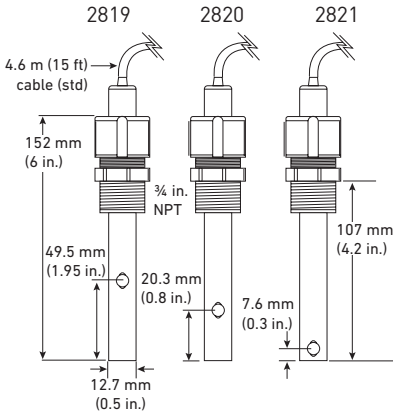

3-2819-S1

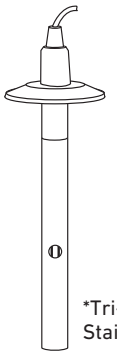

Example Part Number

3-2820-2K-050

Conductivity sensor, K = 0.1, Hastelloy-C electrode, ½ in. PVDF NPT process connector, EPR (EPDM) O-ring, 15.2 m (50 ft) of cable.

*Tri-clamp sensors are available in Stainless Steel and Titanium only.

General				
Operating Range	3-2819	0.055 µS to 100 µS	18.2 MΩ to 10 KΩ	0.02 to 50 ppm
	3-2820	1 µS to 1000 µS	1 MΩ to 1 KΩ	0.5 to 500 ppm
	3-2821	10 µS to 10,000 µS	5 to 5,000 ppm	
Cell Constant Accuracy		±2% of reading (certified cells ±1%)		
Temperature Compensation Device		PT1000		
Wetted Materials				
O-rings		EPR (EPDM))		
Insulator Material		Carbon fiber reinforced PTFE		
Electrodes		316L stainless steel (1.4408, DIN 17440) Hastelloy-C, Titanium or Monel		

Max. Temperature/Pressure Rating		
Standard Polypro Fitting	6.9 bar @ 100 °C	100 psi @ 212 °F
Optional ½ in. NPT 316 SS fitting (3-2820.392)	13.8 bar @ 120 °C	200 psi @ 248 °F
Shipping Weight		
	0.40 kg	0.88 lb
Standards and Approvals		
	RoHS compliant, China RoHS	

Special order products may not meet all of the specifications of the standard sensor assemblies.

SAP Material Number 150 301 003

Conductivity >>

3-2850 electronics can be ordered using the 2819, 2820 and 2821 series conductivity sensors for applications where a longer sensor length is needed.

Wetted Material:
Choose Titanium process connector and sensor body or 316L Stainless Steel.

See Signet Measurement and Control Product Catalog for additional specifications for:

3-2819	3-2850-51
3-2820	3-2850-52
3-2821	

3-2850-XX-XX-X

-	**Output**	
	51	Digital (S^3L)
	52	4 to 20 mA
-	**Cell Constant**	
	19	K= 0.01
	20	K= 0.1
	21	K= 1.0
-	**Sensor Body and Process Connection Material**	
	S	316 L Stainless Steel
	T	Titanium

Example Part Number

3-2850-51-21-T

Conductivity sensor, digital (S^3L) output, K = 1.0 cell constant, Titanium body and process connection.

Wetted Materials		
O-rings	EPR (EPDM)	
Insulator Material	Carbon fiber reinforced PTFE	
Electrodes	316L stainless steel (1.4408, DIN 17440) or Titanium	
Shipping Weight		
	0.79 kg	1.75 lb
Standards and Approvals		
	CE, FCC	
	RoHS compliant, China RoHS	

The 3-2819.606-X dual NPT adapter can be used to adapt the 3-2819-1, 3-2820-1 or the 3-2821-1 Conductivity sensor to the 3-2850-5X electronics.

See page 12.

3-2819.606-X

-	**Process Connection Material**	
	S	316L Stainless Steel
	T	Titanium

Example Part Number

3-2819.606-S

3/4 inch dual NPT Adapter, Stainless Steel connection

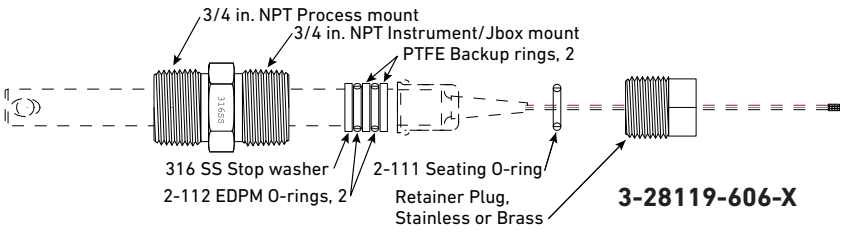

Seat snugly witth one wrench, while hand holding the fitting.
Do not over tighten by using two wrenches!

Shipping Weight		
	0.20 kg	0.44 lb
Standards and Approvals		
	CE	

Special order products may not meet all of the specifications of the standard sensor assemblies.

SAP Material Number 150 301 003

Conductivity >>

Signet 2822-2823 Conductivity Sensors are designed to provide versatile installation and accurate sensing across a broad dynamic range. These sensors are built with a controlled surface finish to ensure accuracy and repeatability.

The standard material of construction is 316L SS, but there are other metals available for maximum chemical compatibility.

A platinum RTD (PT1000) located within the electrode provides accurate temperature sensing.

Refer to the Signet Measurement and Control Product Catalog for additional information.

3-282X-XXX-XXX

Cell Constant	
2	K = 10.0
3	K = 20.0
–	**Sensor Body/Electrode Material**
1	Stainless Steel
2	Hastelloy-C 276
3	Titanium
4	Monel
	Process Connection
K	¾ in. NPT PVDF
S	¾ in. Stainless Steel
C	PVC Submersible
	O-ring Material
-	EPR (EPDM) -Standard material
1	FPM
-	**Cable Length**
025	7.6 m (25 ft
050	15.2 m (50 ft)
075	22.8 m (75 ft)
100	30.5 m (100 ft)

Example Part Number

3-2823-3K1-075

Conductivity Sensor, K = 20, Titanium electrode, FPM O-ring, PVDF ¾ in. NPT process connector with 22.8 m (75 ft) cable.

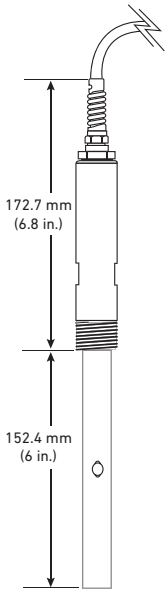

Hastelloy-C, Titanium and Monel sensor style are required to be longer in length to meet the pressure rating of the full Stainless Steel version

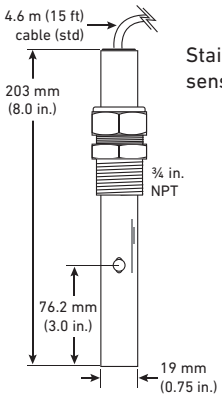

Stainless Steel sensor style

General			
Operating Range	3-2822	100 to 200,000 µS	50 to 100,000 ppm
	3-2823	200 to 400,000 µS	100 to 200,000 ppm
Temperature Compensation Device		PT1000	
Wetted Materials			
O-rings		EPR (EPDM)	
Insulator Material		PEEK®	
Process Connection		Electrodes	See Matrix
		Standard 316 SS fitting	See Matrix

Max. Temperature/Pressure Rating			
Model 3-2823, SS Style		6.9 bar @ 150 °C	100 psi @ 302 °F
Any Model, Hasteloy-C, Monel, Titanium style		5.86 bar @ 100 °C	85 psi @ 212 °F
Shipping Weight			
	3-2822	0.40 kg	0.88 lb
	3-2823	0.30 kg	0.66 lb
Standards and Approvals			
		RoHS compliant, China RoHS	

Special order products may not meet all of the specifications of the standard sensor assemblies.

SAP Material Number 150 301 003

Conductivity >>

2839-1XX 2840-1XX 2841-1XX
2842-1XX

The Signet 2839-2842 Conductivity/ Resistivity Electrodes are available in four cell constants from 0.01 to 10.0 cm^{-1}, and are suitable for a wide variety of applications from high purity water quality monitoring to weak acids and bases. 316 SS electrode surface finishes are controlled in a precision bead blasting operation to ensure measurement accuracy and repeatability (sensor body is PVDF).

A Certificate of Calibration is included with all 2839-2842 Conductivity Electrodes. The electrodes are calibrated to meet 2% accuracy. Electrodes can be shipped back to the GF Signet Factory for recertification.

Refer to the Signet Measurement and Control Product Catalog for additional information.

3-28XX-XX-XXX

	Cell Constant	
39	K = 0.01	
40	K = 0.1	
41	K = 1.0	
42	K = 10	
–	**Sensor Body/Electrode Material**	
1	316 Stainless Steel ONLY	
	Process Connection	
V	NPT	
VD	ISO	
-	**Cable Length**	
025	7.6 m (25 ft)	
050	15.2 m (50 ft)	
075	22.8 m (75 ft)	
100	30.5 m (100 ft)	

Example Part Number

3-2840-1VD-075

Conductivity Sensor, K = 0.1, Stainless steel electrode, ISO Process Connection with 22.8 m (75 ft) cable.

3-2839-1 (0.01 cell)

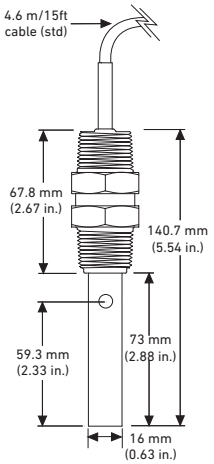

3-2840-1 (0.1 cell)

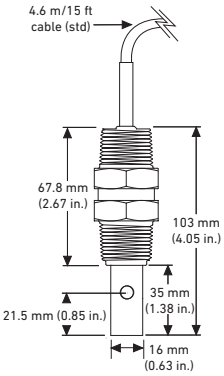

3-2841-1 (1.0 cell)

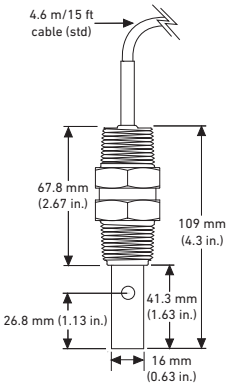

3-2842-1 (10.0 cell)

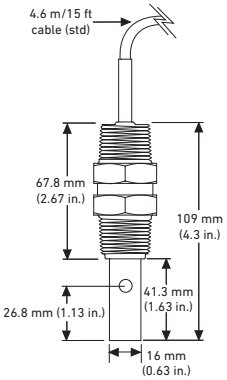

Dual threads ¾ NPT or ISO 7/1-R ¾ front and back

General				
Operating Range				
	2839	0.055 µS to 100 µS	0.02 ppm to 50 ppm	18.2 MΩ to 10 KΩ
	2840	1 µS to 1,000 µS	0.5 ppm to 500 ppm	1 MΩ to 1 KΩ
	2841	10 µS to 10,000 µS	5 ppm to 5,000 ppm	
	2842	100 µS to 200,000 µS	50 ppm to 100,000 ppm	

Wetted Materials	
Internal O-ring (2841 and 2842)	FPM
Insulator Material	PVDF
Electrode Material	316L SS
Threaded Process Connection	PVDF

Max. Temperature/Pressure Rating			
		131 °C @ 2.76 bar	268 °F @ 40 psi
Storage Temperature		-20 °C to 131 °C	-4 °F to 268 °F
Shipping Weight			
	2839	0.34 kg	0.75 lb
	2840, 2841, 2842	0.30 kg	0.66 lb
Standards and Approvals			
		RoHS compliant, China RoHS	
		Manufactured under ISO 9001 for Quality and ISO 14001 for Environmental Management and OHSAS 18001 for Occupational Health and Safety	

Special order products may not meet all of the specifications of the standard sensor assemblies.

SAP Material Number 150 301 003

Conductivity >>

3-28XX-WTA

Cell Constant	
19	K = 0.01
20	K = 0.1
21	K = 1.0
22	K = 10.0
23	K = 20.0

Sensor	
A	½ in. dia. sensor
B	¾ in. dia. sensor

Example Part Number

3-2820-WTA-B

Conductivity sensor, K = 0.1, Wet-Tap electrode assembly with ¾ inch length sensor.

Valve-Insertion Sensor assembly. These insertion sensors are best suited for difficult applications in which the process line can not be interrupted, depressurized or is difficult to reach. These insertion sensors are also excellent for condensate return monitoring and not for boiler blowdown. The O-rings are chosen for best general chemical resistance, not for steam service*.

Wetted materials are 316L stainless steel and PTFE or PEEK, with double O-ring seals of EPR (EPDM). Junction box is aluminium.

Sensor can be used with the 2850 electronics or the Conductivity Module and 9900 Transmitter.

Version "A" ½ inch diameter sensor

Cell constants 0.01, 0.1, 1.0 and 10.0 configuration

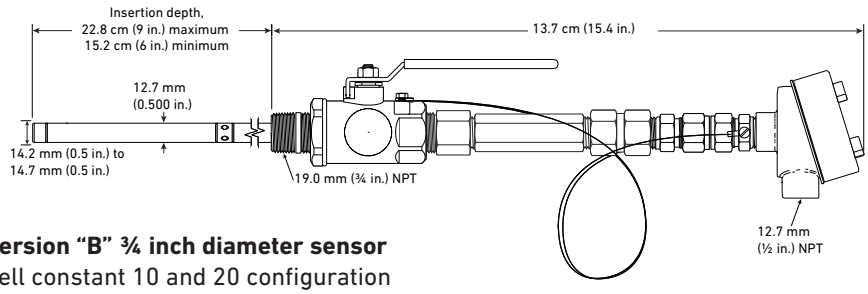

Version "B" ¾ inch diameter sensor

Cell constant 10 and 20 configuration

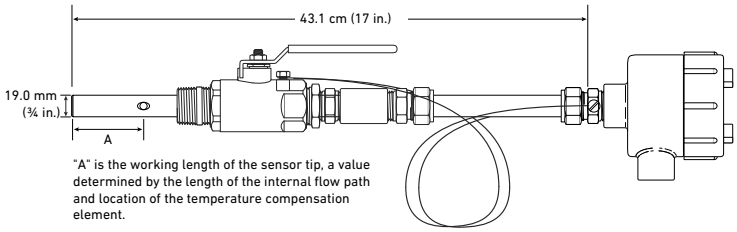

***NOTE:**
The Version "B" ¾" diameter sensor transmits 44% of the line pressure as force trying to push the sensor out of the line. At 50 psi, the operator will have to hold back the equivalent of a 22 pound weight with one arm when retracting the sensor (difficult for the average person). At 100 psi, the force to handle with one arm is 44 pounds (difficult to the point of dangerous, if there is hot fluid in the line). The Version "A" ½" diameter sensor transmits only 19.6% of the line pressure outward, less than half the force from the ½" diameter sensor. It can therefore be safely operated at pressures up to 100 psi.

Special only, not in the Signet Measurement and Control Product Catalog. Contact GF Signet for more information.

General	
Cell Constant	
	0.01
	0.1
	1
	10
	20
Wetted Materials	
	316 Stainless Steel
	PVDF
	EPR (EPDM) O-rings
Temperature Element	
	PT1000

Temperature and Pressure Rating		
Stand Alone Sensor	6.8 bar / 100 psi at 120 °C (no ball valve)	
With Ball Valve	3.5 bar / 50 psi at all temperatures (no exceptions)	
½ inch sensor	6.8 bar/100 psi	
¾ inch sensor	3.5 bar/50 psi at all temperatures	
Connections		
	Sensor assembly ¾ in. NPT	
	Ball valve 1 in. NPT	
Shipping Weight		
2819, 2820, 2821	1.60 kg	3.5 lb
2822, 2823	2.50 kg	5.5 lb

Special order products may not meet all of the specifications of the standard sensor assemblies.

SAP Material Number 150 301 003

Conductivity >>

High Temperature, High Pressure

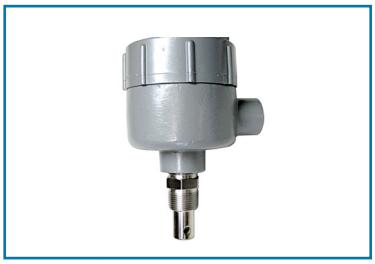

3-28XX-HTHP

Cell Constant	
19	K = 0.01
20	K = 0.1
21	K = 1.0

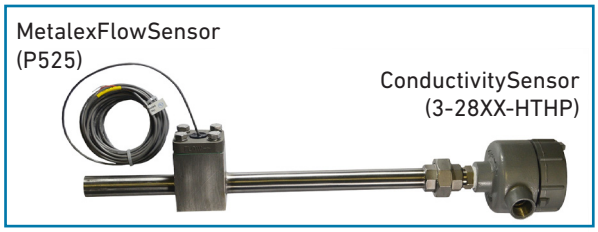

Custom stainless steel manifold available in ¾ inch to 12 inch.

Example Part Number

3-2820-HTHP

Conductivity sensor, K = 0.1, High Temperature, High Pressure.

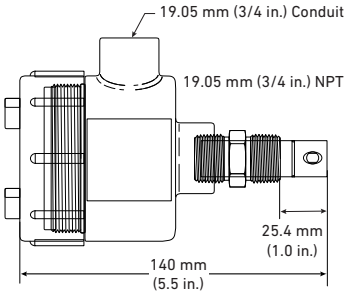

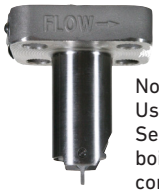

Note:
Use the P525 Metalex Sensor to monitor boiler feed water and condensate return.

The 28XX-HTHP Conductivity Sensor is designed for the high temperature and pressures normally found in boiler applications.

Ideal applications include blow-down control, condensate return monitoring, leak detection on heat exchanges and steam purity measurement.

Wetted materials include, 316L Stainless steel, PEEK, EPR (EPDM) O-rings. Available in three cell constants.

Special only, not in the Signet Measurement and Control Product Catalog. Contact GF Signet for more information.

Contact GF Signet

Special products for prices on a boiler control package, Conductivity Senors, Metalex Flow Sensor and/ or 9900 Transmitters.

Max Pressure/Temperature ratings		
	High Temperature Sensor	250 psig at 205 °C
		500 psig at 100 °C
Wetted Materials		
	Electrodes	316L Stainless Steel
	O-rings	PEEK, EPR (EPDM)
Shipping Weight		
	1.02 kg	2.25 lb

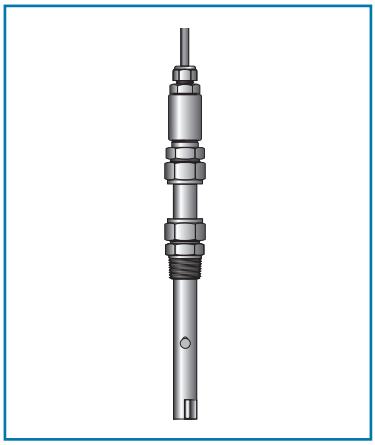

3-28XX-HP

Cell Constant	
22	K = 10.0
23	K = 20.0

Example Part Number

3-2822-HP

Conductivity sensor, K = 10.0, High Pressure.

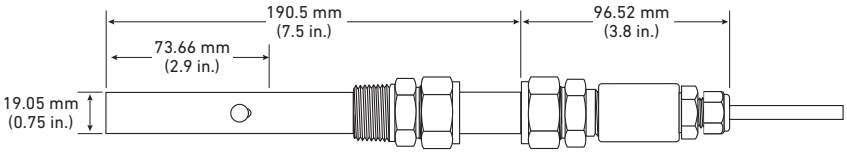

The 28XX-HP Conductivity Sensor is designed for high pressure applications.

Wetted materials include 316L stainless steel, PEEK, EPR (EPDM) O-rings. Available in two cell constants.

Special only, not in the Signet Measurement and Control Product Catalog. Contact GF Signet for more information.

Max Pressure/Temperature ratings		
	High Pressure Sensor	500 psig at 25 °C
Wetted Materials		
	Electrodes	316L Stainless Steel
Shipping Weight		
	1.02 kg	2.25 lb

Special order products may not meet all of the specifications of the standard sensor assemblies.

SAP Material Number 150 301 004

Temperature/ Pressure >>

The Signet 2350 Temperature Sensor has a one piece injection molded PVDF body that is ideal for use in high purity applications. It also outlasts metal sensors in aggressive liquids and eliminates the need for costly custom thermowells. These sensors will have both a proprietary digital (S^3L) output and field-scaleable 4 to 20 mA output.

Dual threaded ends (¾ in. NPT) allow submersion in process vessels, or in-line installation with conduit connection. An integral adapter kit (sold separately) may be used to create a compact assembly with field mount versions of the Signet 9900 Transmitter, or see page 28 to purchase a complete integral temperature/9900 sensor assembly.

3-2350-X-XXX

–	**Sensor**
3	S^3L or 4 to 20 mA output
-	**Process Connector**
-	¾ in. NPT process connector
U	½ in. Union process connector
-	**Cable**
025	7.6 m (25 ft)
050	15.2 m (50 ft)
075	22.8 m (75 ft)
100	30.5 m (100 ft)

Example Part Number

3-2350-3-075

Temperature sensor, S^3L or 4 to 20 mA output, ¾ in. NPT process connector, with 22.8 m (75 ft) cable

* Special only, not in the Signet Measurement and Control Product Catalog. Contact GF Signet for more information.

Shipping Weight		
	0.22 kg	0.49 lb
Standards and Approvals		
	CE, FCC	
	RoHS compliant, China RoHS	
	Manufactured under ISO 9001 for Quality and ISO 14001 for Environmental Management and OHSAS 18001 for Occupational Health and Safety	

The 2450 Pressure Sensor has a one-piece injection molded PVDF body and ceramic diaphragm for superior compatibility in corrosive liquids. Three pressure versions allow for optimal resolution matched to your sensing needs. Solid state circuitry eliminates drift (no internal potentiometers). These sensors will have both a proprietary digital (S^3L) output, or field-scaleable 4 to 20 mA output.

An integral mount kit (3-8052, sold separately) may be used to create a compact assembly with field mount versions of the Signet 9900, or see page 28 to purchase a complete integral pressure/9900 sensor assembly.

GF Signet can custom span the 4 to 20 mA output to customers requirements. Can be ranged to vacuum

Vacuum Range		
U	-0.1 to 0.7 bar	-1.5 to 10 psi
L	-0.41 to 3.4 bar	-6.0 to 50 psi
H	-0.96 to 17.2 bar	-14.6 to 250 psi

3-2450-7X-X-XXX

7	½ in. Union Adapter
Pressure range	
U	0 to 0.7 bar (0 to 10 psi)
L	0 to 3.4 bar (0 to 50 psi)
H	0 to 17 bar (0 to 250 psi)
O-ring Material	
-	FPM
1	EPR (EPDM)
–	**Cable Length**
025	7.6 m (25 ft)
050	15.2 m (50 ft)
075	22.8 m (75 ft)
100	30.5 m (100 ft)

Example Part Number

3-2450-7U-100

Pressure sensor, 0-10 psi with 30.5 m (100 ft) cable

Shipping Weight		
	0.150 kg	0.33 lb
Standards and Approvals		
	CE, FCC	
	RoHS compliant, China RoHS	
	Manufactured under ISO 9001 for Quality and ISO 14001 for Environmental Management and OHSAS 18001 for Occupational Health and Safety	

Special order products may not meet all of the specifications of the standard sensor assemblies.

SAP Material Number 150 301 004

pH/ORP >>

Submersible In-line

The Signet 2750 pH/ORP Sensor Electronics and 2760 Preamplifier/connector feature the DryLoc® connector, providing robust connection to Signet DryLoc electrodes.

The 2750 has a preamplified signal and features two different outputs: a two-wire 4 to 20 mA loop output and a digital (S^3L) output and is compatible with the Signet 8900 or 9900 instruments, or any 4 to 20 mA data logger or PLC.

The 2760 Preamplifier allows any DryLoc pH/ORP electrode to work with Signet ProcessPro® and ProPoint® instruments and instruments that do not require preamplified signals.

The 2722 must be used to connect any third party pH or ORP electrode that has a BNC connector to Signet 9900 or 8900 instruments. An external 3K or 10K resistor (not supplied) will be required.

Refer to the Signet Measurement and Control Product Catalog for additional information.

3-2750-X-XXX

–	Type of electronics
3	Submersible Gray Body, ¾ in. NPT threads
4	Submersible Gray Body, ¾ in. ISO threads
7	In-line yellow Body, ¾ in. NPT threads
8	In-line yellow Body, ¾ in. ISO threads

–	Cable Length
025	7.6 m (25 ft)
050	15.2 m (50 ft)
075	22.8 m (75 ft)
100	30.5 m (100 ft)

Example Part Number

3-2750-3-050

pH/ORP Sensor Electronics, Submersible Gray Body with ¾ in. NPT threads and 50 ft of cable.

3-2760-X-XXX

–	Type of electronics
1	Submersible Gray Body, ¾ in. NPT threads
2	Submersible Gray Body, ¾ in. ISO threads
11	In-line Yellow Body, ¾ in. NPT threads
21	In-line Yellow Body, ¾ in. ISO threads

–	Cable Length
025	7.6 m (25 ft)
050	15.2 m (50 ft)
075	22.8 m (75 ft)
100	30.5 m (100 ft)

3-2722 BNC DryLoc Adapter

The 2722 DryLoc adapter is used to connect the Signet high temperature pH and ORP electrodes used in submersible applications to the 2750/2760 electronics.

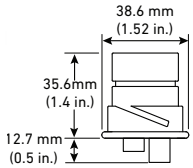

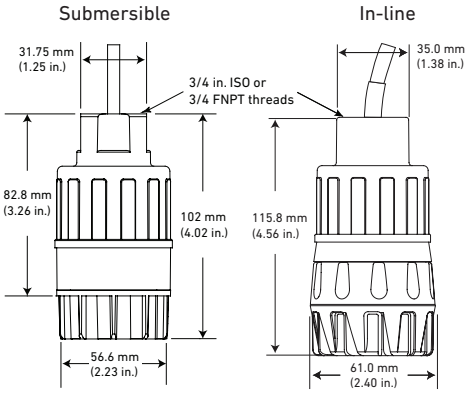

General		
Operating Range	pH	0 to 14 pH
	ORP	±2000 mV
Electrical		
Power - 2750	12 to 24 VDC	±10%, regulated for 4 to 20 mA output
	5 to 6.5 VDC	±5% regulated recommended, 3 mA max., for digital (S^3L) output
Accuracy -2750	±32 µA	
Resolution -2750	±5 µA	
Update Rate	0.6 seconds	
Max. Temperature/Pressure Rating		
Submersible	0 °C to 85 °C	32 °F to 185 °F
In-line	0 °C to 110 °C	32 °F to 230 °F

Relative Humidity	0 to 95%, non-condensing (without electrode connected)	
Storage Temperature		
	-20 °C to 85 °C	-4 °F to 185 °F
Shipping Weight		
2750-1 & -2	0.75 kg	1.65 lb
2750-3 & -4	0.64 kg	1.41 lb
Standards and Approvals		
	CE, FCC	
	RoHS compliant, China RoHS	
	Manufactured under ISO 9001 for Quality and ISO 14001 for Environmental Management and OHSAS 18001 for Occupational Health and Safety	

Special order products may not meet all of the specifications of the standard sensor assemblies.

SAP Material Number 150 301 005

Systems >>

3-2505-XX

Output Module Option	
1C	Pulse divider/flow switch/totalizer - Dry-contact relay
2C	Pulse divider/flow switch/totalizer - Solid state relay
5C	Digital (S^3L) Output
6C	4 to 20 mA Output

Example Part Number

3-2505-5C

Sensor Electronics in Universal Junction Box, Digital (S^3L) Output.

The 2505-XX has the Signet 2537 paddlewheel sensor electronics, mounted in the universal junction box. Use to easily upgrade paddlewheel sensors in the field. The electronics module mounts directly onto the pipe or wall, and is compatible with all GF and third party open collector output sensors with signal levels of 5 to 24 volts and output frequency up to 1000 Hz.

Refer to the Signet Measurement and Control Product Catalog for additional information regarding the 2537 technical specifications.

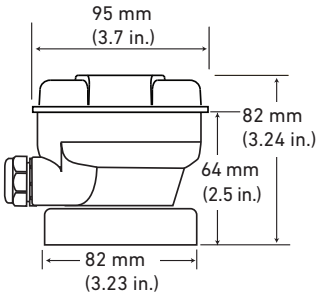

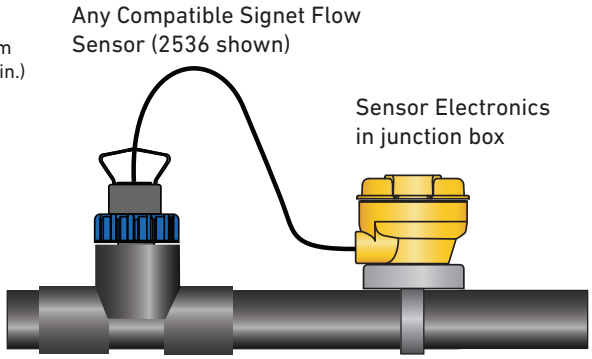

Compatible Signet Flow Sensors

2000	2100	2507	2536
2540	2551	2552	

Electrical			
Multi	With Dry-Contact Relay	24 VDC nominal, ±10%, regulated, 30 mA max current	
	With Solid-State Relay	6 V to 24 VDC, ±10%, regulated, 30 mA max current	
	Digital (S^3L)	5.0 VDC min to 6.5 VDC max., 30 mA max current (1.5 mA nominal)	
	4 to 20 mA	400 mV max ripple voltage, 30 mA max current	
	Maximum Pulse Rate	300 Hz	
	Maximum Pulse Width	50 ms	
	Minimum Pulse Rate	0.5 Hz	
	Compatible with PLC, PC or similar equipment		
	Compatible with customer supplied metering pump		
Digital (S^3L) Version		5 VDC nominal, regulated, 3 mA max current	
	Type	Serial ASCII, TTL level 9600 bps	
	Max. Cable Length	Refer to Signet 8900 wiring specifications.	
	Compatible with Model Signet 8900 Multi-Parameter Controller		
4 to 20 mA Version		12 to 32 VDC nominal, ±10%, regulated, 21 mA max current	
	Loop Accuracy	±32 µA @ 25 °C @ 24 VDC	
	Loop Resolution	5 µA	
	Temp. Drift	±1µA per °C max.	
	Power Supply Rejection	±1µA per V	
	Max. Cable	305 m	1000 ft
	Maximum Loop Resistance	600 Ω @ 24 VDC	1 KΩ @ 32 VDC
	Load Impedance	375 Ω	
Reverse Polarity and Short Circuit Protected		Up to 40 V, 1 hour	
Over-voltage Protection		> 40 VDC over 1 hour	
Relay Specifications			
	Mechanical SPDT	5 A @ 30 VDC, 5 A @ 250 VAC	
	Solid-State Relay	100 mA @ 40 VDC, 70 mA @ 33 VAC	
	Relay Modes	Low, High	
	Time Delay	0.0 to 6400.0 seconds	
	Hysteresis	Adjustable for exiting alarm condition	
Shipping Weight			
		0.64 kg	1.41 lb
Standards and Approvals			
	CE, UL, NSF and FCC		
	China RoHS		
	Manufactured under ISO 9001 for Quality and ISO 14001 for Environmental Management and OHSAS 18001 for Occupational Health and Safety		

Special order products may not meet all of the specifications of the standard sensor assemblies.

SAP Material Number 150 301 005

Level >>

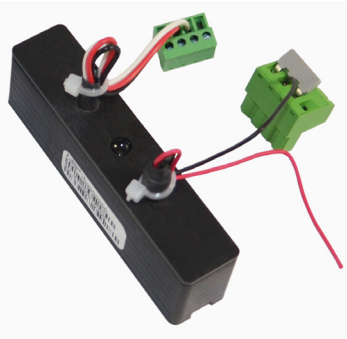

3-8058-3

3-8058-X

Signal Converter only	
3	Single input converter; 4 to 20 mA output converted to a digital (S^3L) output, for use with the 9900-1P only

3-9900-1P-IGO

9900 Panel Mount with 3-8058-3 i-GO® connector

3-9900.399-X

Rear Enclosure		Signet Accessory Reference
1	with hinged cover	159 001 834
2	with flat cover	159 001 835

The Signet i-Go 8058-3 Signal Converter converts a 4 to 20 mA signal to a Digital (S^3L) signal. This allows any third party device with a 4 to 20 mA output, to connect to the 9900 Transmitter (only accepts a Digital (S^3L) input).

The 9900 Transmitter's 4 to 20 mA option when used with the 8058-3, allows information from the 4 to 20 mA output of a device, to be visually displayed on the 9900.
The user can also customize the units and the description on the 9900 display. For example, when using the converter with the 2270 Level Sensor, the 9900 Transmitter can be configured to display signal and units of the level sensor output.

The Signet i-Go 8058-3 Signal Converter is designed to fit in the Relay Module slot of the 9900-1P Panel Mount Transmitters. The 8058-3 can be purchased individually or as a complete package, Signet 3-9900-1P-IGO, that includes the 9900-1P Transmitter.

If using the 8058-3 Signal Converter together with a Relay Module, the 8058-3 can be attached to the 9900 Transmitter using a hook and loop strip (supplied). The Relay Module adds two dry contact relays, SPDT. The relays and/or open collector in the 9900 can be used to indicate alarm conditions, including low alarm, high alarm, and proportional pulse.

3-8058-3 shown installed in 9900 transmitter

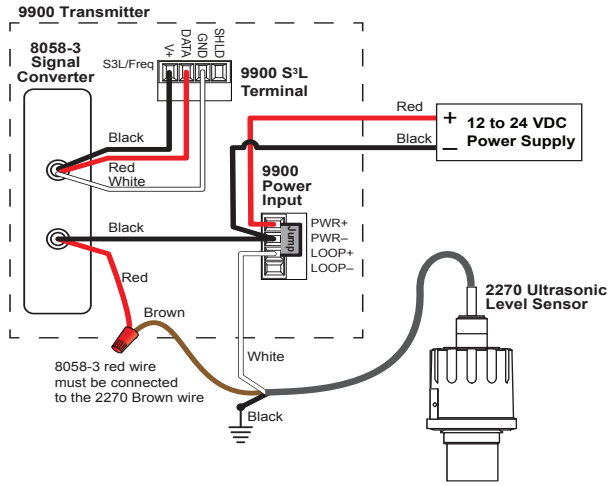

Refer to instruction sheet for wiring to other third party devices.

2270 Ultrasonic Level Sensor

General		
Input	4 to 20 mA current loop, passive (external power required)	
Input Range	3.6 to 22.1 mA	
Output	Digital (S^3L) output	
Accuracy	± 32 µA @ 25 °C	
Electrical		
Max. Voltage	35 VDC	
Max. Current	40 mA	
Isolation	Up to 48 VAC/DC	
Voltage Drop	5 VDC max.	
	Reverse polarity protected	

Max. Recommended Cable Extensions			
	Loop in	300 m (1000 ft)	
Environmental			
Operating Ambient Temperature		-10 °C to 55 °C	14 °F to 131 °F
Storage Temperature		-20 °C to 85 °C	-4 °F to 185 °F
Relative Humidity		3-8058-3: 0 to 100%, condensing	
Shipping Weight			
	3-8058-3	0.09 kg	0.20 lb
Standards and Approvals			
		CE, FCC	
		RoHS compliant, China RoHS	

Special order products may not meet all of the specifications of the standard sensor assemblies.

SAP Material Number 150 301 005

Integral Systems >>

Paddlewheel Flow with 9900 Transmitter

3-9900-1-851XX-X

		Sensor/ Sensor Body Material/ Sensor Rotor/ Pin Material
Integral Version of 515	0P	3-8510-PX/ Polypropylene/ Black PVDF/ Titanium
	0H	3-8510-HX/ Polypropylene/ Black PVDF/ Hastelloy-C
	0S	3-8510-SX/ Polypropylene/ Black PVDF/ Natural PVDF
	0V	3-8510-VX/ Natural PVDF/ Natural PVDF/ Hastelloy-C
	0T	3-8510-TX/ Natural PVDF/ Natural PVDF/ Natural PVDF
Integral Version of 2536	2P	3-8512-PX/ Polypropylene/ Black PVDF/ Titanium
	2H	3-8512-HX/ Polypropylene/ Black PVDF/ Hastelloy-C
	2S	3-8512-SX/ Polypropylene/ Black PVDF/ Natural PVDF
	2V	3-8512-VX/ Natural PVDF/ Natural PVDF/ Hastelloy-C
	2T	3-8512-TX/ Natural PVDF/ Natural PVDF/ Natural PVDF

–	Pipe Size
0	½ to 4 in
1	5 to 8 in. - P1 versions only

Signet has combined the 9900 SmartPro® Transmitter with the integral versions of the 515 (8510) and 2536 (8512) Paddlewheel Flow sensors, to create integral systems that are easy to order and simple to install. Also available in conductivity, level, temperature, and pressure configurations, each integral system features a 9900 Transmitter which provides a local and easy to read LCD display. The push button keypad makes it easy to navigate through the transmitter's menu.

The DC-powered 9900 features a scalable 4 to 20 mA output and open collector for process control.

The integral 9900 system is combined with Signet's field-proven Models 8510 and 8512. These sensors reliably perform in flow ranges from 0.3 to 6 m/s (1 to 20 ft/s) and 0.1 to 6 m/s (0.3 to 20 ft/s) respectively for pipe sizes from ½ to 8 inches. They are available in a variety of materials including polypropylene and PVDF and are easily mounted in the pipe using Signet's comprehensive line of standard fittings.

Special only, not in the Signet Measurement and Control Product Catalog. Contact GF Signet for more information.

Example Part Number

3-9900-1-0P-0

9900 Transmitter with 8510-P0 paddlewheel sensor, polypropylene body, PVDF rotor and Titanium pin, for pipe size ½ to 4 in

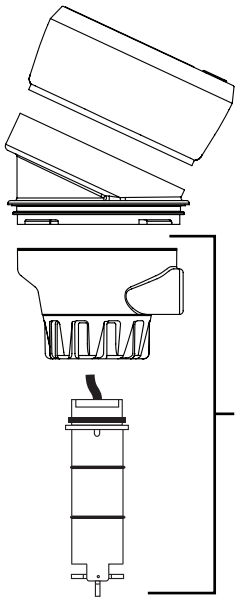

3-9900-1 Field Mount Instrument

3-9900.396 (159 001 701) Angle Adjustment Adapter Kit

3-8510-X (515) or 3-8512-X (2536) Integral Flow Sensor with 3-8150-X integral mount kit

-X0 = 170 mm (6.7 in.)
-X1 = 203 mm (8.0 in.)

See pages 4 and 5 to choose modified materials for the flow sensor.

Ordering Notes

Integral Mounts are available with all parts conveniently assembled (transmitter, sensor, and mounting kit). Alternatively, all three parts can be purchased separately. See individual transmitter and sensor catalog pages for more information. Refer to Models 8510, 8512 and 9900 technical specifications for more details.

Shipping Weight		
	1.10 kg	2.4 lb
Standards and Approvals		
	See individual product datasheet for approvals	

Special order products may not meet all of the specifications of the standard sensor assemblies.

SAP Material Number 150 301 005

Integral Systems >>

Magmeter Flow with 9900 Transmitter

Signet has combined the 9900 SmartPro® Transmitter with the 2551 Magmeter Flow sensor to create integral systems that are easy to order and simple to install. Each integral system features a NEMA rated 4X/IP65 9900 Transmitter, which provides a local and easy to read LCD display. The push button keypad makes it easy to navigate through the transmitter's menu. The 9900 comes complete with a six pin, waterproof connector (cable not included) to apply 12/24 VDC power and access the passive, scalable 4 to 20 mA output and an open collector relay for process control and data logging.

The integral 9900 system is combined with Signet's field-proven 2551 Magmeter. These sensors reliably perform in flow ranges from 0.05 to 10 m/s (0.15 to 33 ft/s) for pipe sizes from DN15 to DN900 (½" to 36"). They are available in a variety of wetted materials including Polypropylene and PVDF with optional SS, Titanium or Hastelloy-C electrode material for maximum chemical compatibility. Electrodes are easily mounted in the pipe using Signet's comprehensive line of standard fittings.

Special only, not in the Signet Measurement and Control Product Catalog. Contact GF Signet for more information.

3-9900-2551-XX

	Instrument + Sensor / Pipe Size / Sensor Body
P0	3-9900-1 w/3-2551-P0 / DN15 to DN100 (½ to 4 in.) / Polypropylene and 316L SS
T0	3-9900-1 w/3-2551-T0 / DN15 to DN100 (½ to 4 in.) / PVDF and Titanium
V0	3-9900-1 w/3-2551-V0 / DN15 to DN100 (½ to 4 in.) / PVDF and Hastelloy-C
P1	3-9900-1 w/3-2551-P1 / DN125 to DN200 (5 to 8 in.) / Polypropylene and 316L SS
T1	3-9900-1 w/3-2551-T1 / DN125 to DN200 (5 to 8 in.) / PVDF and Titanium
V1	3-9900-1 w/3-2551-V1 / DN125 to DN200 (5 to 8 in.) / PVDF and Hastelloy-C
P2	3-9900-1 w/3-2551-P2 / DN250 to DN900 (10 to 36 in.) / Polypropylene and 316L SS
T2	3-9900-1 w/3-2551-T2 / DN250 to DN900 (10 to 36 in.) / PVDF and Titanium
V2	3-9900-1 w/3-2551-V2 / DN250 to DN900 (10 to 36 in.) / PVDF and Hastelloy-C

Example Part Number

3-9900-2551-V0

3-9900-1 Transmitter with 3-2551-V0 Magmeter Flow Sensor, PVDF and Hastelloy-C body, for pipe size DN15 to DN100 (½ to 4 in.)

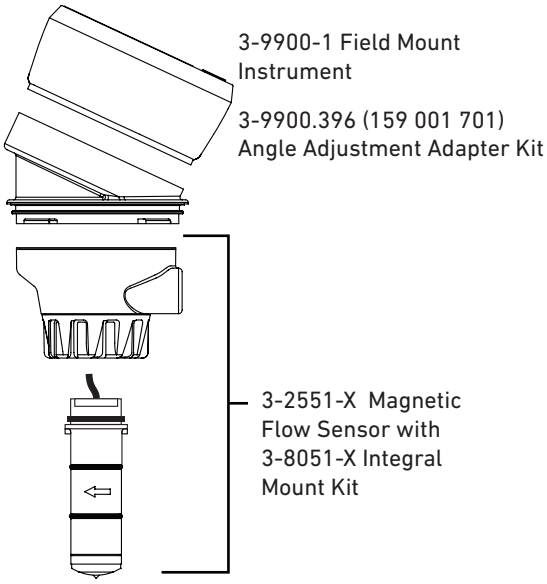

Pipe range:

½ to 4 in.	-X0 = 58 mm (2.3 in.)
5 to 8 in.	-X1 = 91 mm (3.6 in.)
10 to 36 in.	-X2 = 167 mm (6.6 in.)

Shipping Weight		
	1.10 kg	2.4 lb
Standards and Approvals		
	See individual product datasheet for approvals	

Special order products may not meet all of the specifications of the standard sensor assemblies.

SAP Material Number 150 301 005

Integral Systems >>

Conductivity with 9900 Transmitter

3-9900-1-XXXX

–	Sensor/ Cell Constant/ Threads
19DS	3-2819 Stainless Steel/ 0.01 cm^{-1}/ ¾ in. NPT
19DT	3-2819 Titanium/ 0.01 cm^{-1}/ ¾ in. NPT
20DS	3-2820 Stainless Steel/ 0.1 cm^{-1}/ ¾ in. NPT
20DT	3-2820 Titanium/ 0.1 cm^{-1}/ ¾ in. NPT
21DS	3-2821 Stainless Steel/ 1.0 cm^{-1}/ ¾ in. NPT
21DT	3-2821 Titanium/ 1.0 cm^{-1}/ ¾ in. NPT
22-1S	3-2822 Stainless Steel/ 10.0 cm^{-1}/ ¾ in. NPT
23-1S	3-2823 Stainless Steel/ 20.0 cm^{-1}/ ¾ in. NPT
39V	3-2839-1/ 0.01 cm^{-1}/ ¾ in. NPT
40V	3-2840-1/ 0.1 cm^{-1}/ ¾ in. NPT
41V	3-2841-1/ 1.0 cm^{-1}/ ¾ in. NPT
42V	3-2842-1/ 10.0 cm^{-1}/ ¾ in. NPT
39VD	3-2839-1D/ 0.01 cm^{-1}/ ISO 7/1-R ¾
40VD	3-2840-1D/ 0.1 cm^{-1}/ ISO 7/1-R ¾
41VD	3-2841-1D/ 1.0 cm^{-1}/ ISO 7/1-R ¾
42VD	3-2842-1D/ 10.0 cm^{-1}/ ISO 7/1-R ¾

Signet has combined the 9900 SmartPro® Transmitter with conductivity and resistivity sensors to create integral systems that are easy to order and simple to install. Also available in flow, level, temperature and pressure configurations, each integral system features a 9900 Transmitter which provides a local and easy to read LCD display. The push button keypad makes it easy to navigate through the transmitter's menu. The DC-powered 9900 features a scalable 4 to 20 mA output and open collector for process control.

The integral system is offered with all GF Signet conductivity sensors with cell constants ranging from 0.01 to 20. These sensors are field proven and reliably perform in ranges from 18.2 MΩ (0.055 µS) to 400,000 µS. They are ideal for installation into standard pipes via the ¾ inch sensor threaded (NPT or ISO) process connection. The sensors are available with 316 stainless steel and PVDF wetted materials.

Special only, not in the Signet Measurement and Control Product Catalog. Contact GF Signet for more information.

Ordering Notes

Integral Mounts are available with all parts conveniently assembled (transmitter, sensor, and mounting kits). Alternatively, all three parts can be purchased separately. See individual instrument and sensor catalog pages for more information. Refer to Models 2839, 2840, 2841, 2842, and 9900 technical specifications for more details.

Shipping Weight		
	1.10 kg	2.4 lb
Standards and Approvals		
	See individual product datasheet for approvals	

Example Part Number

3-9900-1-40VD

9900 Transmitter with 3-2840-1D sensor with a Cell constant of 0.1 cm-1, ISO 7/1-R ¾ threads.

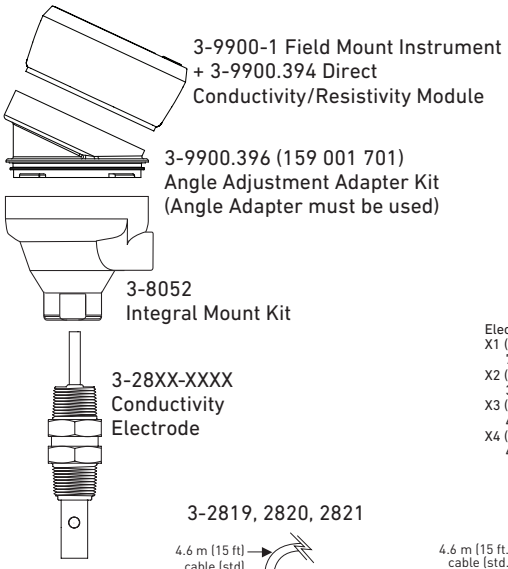

3-2839, 2840, 2841, 2842

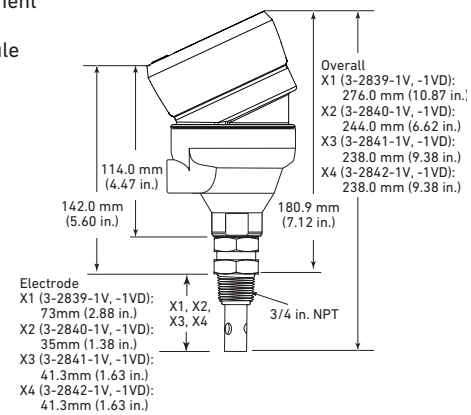

3-2819, 2820, 2821

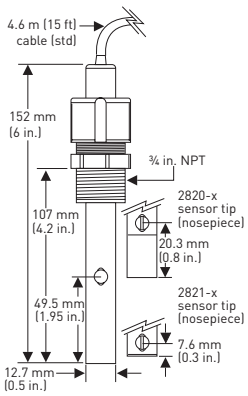

3-2822

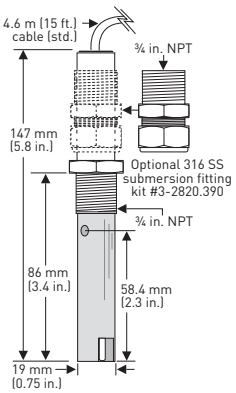

3-2823

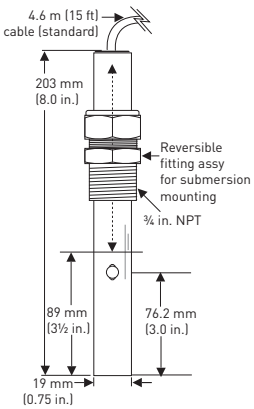

Special order products may not meet all of the specifications of the standard sensor assemblies.

SAP Material Number 150 301 005

Integral Systems >>

Pressure with 9900 Transmitter

3-9900-1-XX

–	Sensor/ Pressure Range/ Process Connection
3U	3-2450-3U/ 0 - 0.7 bar (0 - 10 psi)/ ½ in. Union
3L	3-2450-3L/ 0 - 3.4 bar (0 - 50 psi)/ ½ in. Union
3H	3-2450-3H/ 0 - 17 bar (0 - 250 psi)/ ½ in. Union

Example Part Number

3-9900-1-3U

9900 Transmitter with 3-2450-3U, 0 - 0.7 bar (0 - 10 psi) pressure range with ½ in. Union process connection.

Signet has combined the 9900 SmartPro® Transmitter with the 2450 Pressure sensors to create integral systems for level applications that are easy to order and simple to install. Also available in conductivity, temperature, and flow configurations, each integral system features a 9900 Transmitter which provides a local and easy to read LCD display. The push button keypad makes it easy to navigate through the transmitter's menu. The DC-powered 9900 features a scalable 4 to 20 mA output and open collector for process control.

The integral system offers a local display, a scalable 4 to 20 mA output and open collector for process control. A 2450 Pressure sensor with wetted materials of ceramic and PVDF installs into a ½" union fitting. The 2450 Pressure sensor is offered in three pressure ranges which could also be used as a hydrostatic level for tank level management.

Special only, not in the Signet Measurement and Control Product Catalog. Contact GF Signet for more information.

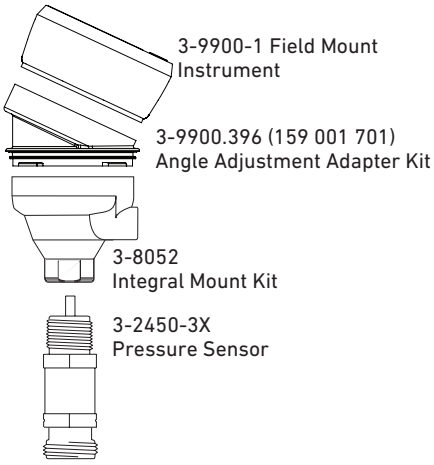

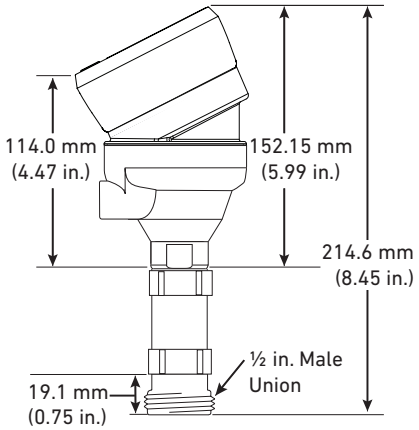

Sensor can be mounted through the side of a tank for hydrostatic level measurement. **Tip:** Add a ball valve to isolate the sensor from the tank to allow the removal of the sensor for service.

It is not recommended to use the 2450 Pressure sensor mounted inside a tank. For all tank installations where the sensor is mounted inside a tank, use 2250 Hydrostatic Level Sensor only.

Pressure/Level Ranges:	
3-2450-3U	0 to 10 psi = 0 to 7.03 meters = 0 to 23.06 ft
3-2450-3L	0 to 50 psi = 0 to 35.15 meters = 0 to 115.32 ft

Ordering Notes

Integral Mounts are available with all parts conveniently assembled (transmitter, sensor, and mounting kit). Alternatively, all three parts can be purchased separately. See individual transmitter and sensor pages for more information.

Shipping Weight		
	1.10 kg	2.4 lb
Standards and Approvals		
	See individual product datasheet for approvals	

Special order products may not meet all of the specifications of the standard sensor assemblies.

SAP Material Number 150 301 005

Integral Systems >>

Temperature with 9900 Transmitter

3-9900-1-X

–	Sensor / Description
1	3-2350-1 / 4 to 20 mA and one open collector + digital (S^3L) temperature sensor, ¾ in. NPT threads
2	3-2350-1 / 4 to 20 mA and one open collector + digital (S^3L) temperature sensor, ½ in. union process connector

Example Part Number

3-9900-1-1

9900 Transmitter with 3-2350-1 temperature sensor with 4 to 20 mA and digital (S^3L) output plus one open collector output

Signet has combined the 9900 SmartPro® Transmitter with the 2350 Temperature sensors to create integral systems that are easy to order and simple to install. Also available in conductivity, flow, level, and pressure configurations, each integral system features a 9900 Transmitter which provides a local and easy to read LCD display. The push button keypad makes it easy to navigate through the transmitter's menu.

The DC-powered 9900 features a scalable 4 to 20 mA output and open collector for process control.

The integral system is offered with a Signet 2350 Temperature sensor and is available in a range of -10 °C to 100 °C (14 °F to 212 °F). Sensor installation is achieved into standard pipes via the ¾ inch threaded NPT process connection. The sensor is available with PVDF as a wetted material.

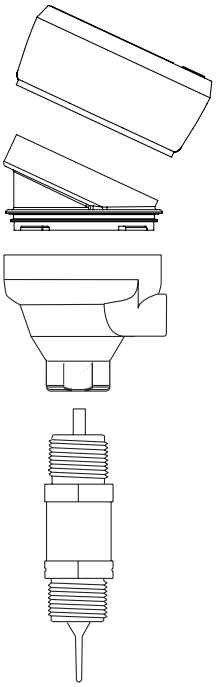

3-9900-1 Field Mount Instrument

3-9900.396 (159 001 701) Angle Adjustment Adapter Kit

3-8052 Integral Mount Kit

3-2350-1 Temperature Sensor

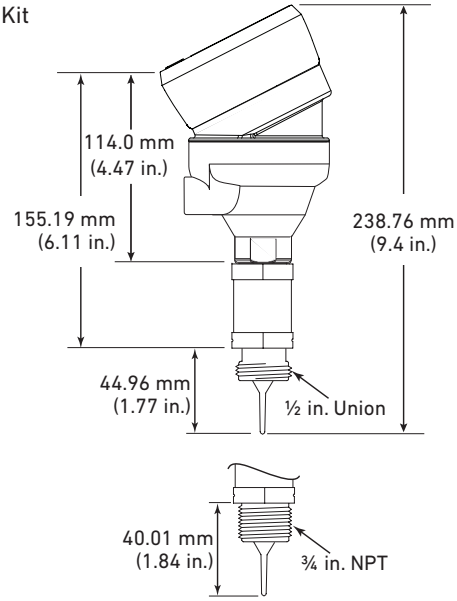

Ordering Notes

The Integral Mount is available with all parts conveniently assembled (instrument, sensor, and mounting kit). Alternatively, all three parts can be purchased separately. See individual transmitter and sensor pages for more information.

Shipping Weight		
	1.10 kg	2.4 lb
Standards and Approvals		
	See individual product datasheet for approvals	

Special order products may not meet all of the specifications of the standard sensor assemblies.

SAP Material Number 150 301 006

Dissolved Oxygen >>

Rail mount adapter, extension pipes and float assembly for Dissolved Oxygen, pH, ORP, and Conductivity sensors.

The rail mount adapter has a dual pivot point which allows any GF Signet sensor pipe assembly (sold separately) to move, both vertically and horizontally, over an open channel, tank, or process weir. Once the sensor is brought out of the solution vertically, a safety pin locks the sensor into position, and the horizontal axis is used to swing the sensor assembly safely outside the process area for maintenance and cleaning. Manufactured out of SS for corrosion resistance.

The GF Signet float assembly allows any Signet electrode to be placed into a process at a specific depth. The float comes complete with a 1 inch male NPT nipple assembly, which threads into a customer supplied piping system.

Call the factory for ISO piping requirements.

Special only, not in the Signet Measurement and Control Product Catalog. Contact GF Signet for more information.

3-2610.XXX

3-2610.312	Rail Mount Adapter and extension pipes for Dissolved Oxygen, pH, ORP, and conductivity sensors
3-2610.FLT	Float assembly for Dissolved Oxygen, pH, ORP, and conductivity sensors

Example Part Number

3-2610.312

Rail Mount adapter and extension pipes

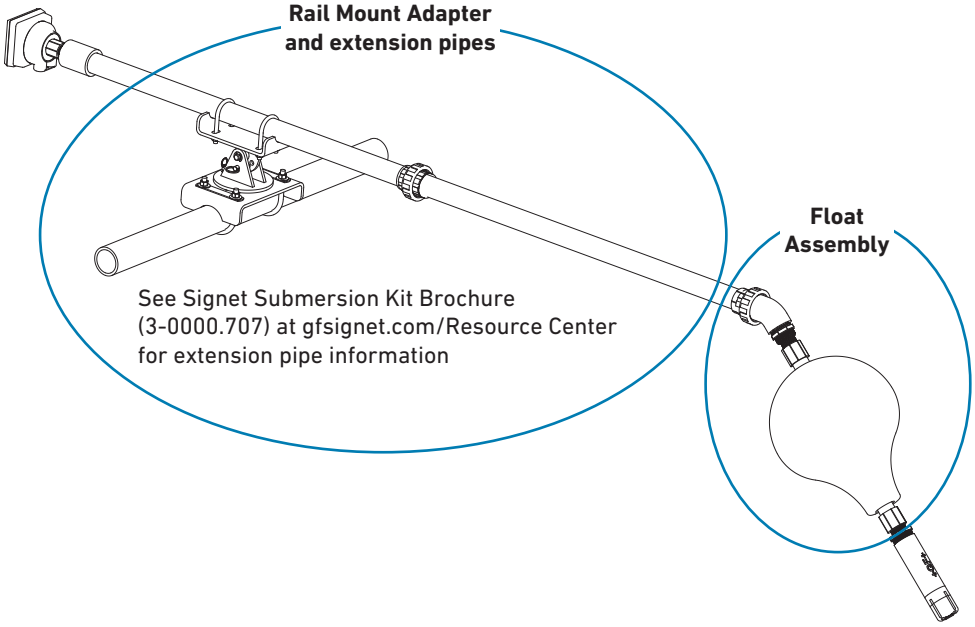

Shipping Weight
Contact factory

Special order products may not meet all of the specifications of the standard sensor assemblies.

SAP Material Number 150 301 006

Dissolved Oxygen >>

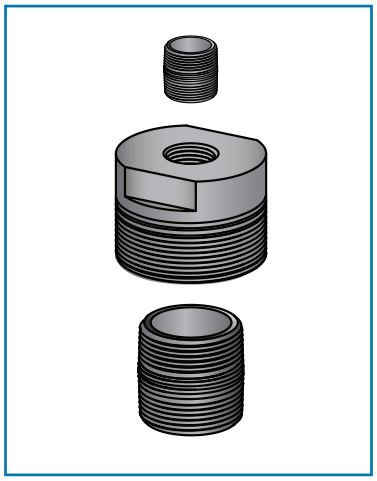

2610 Dissolved Oxygen/ 9900 Adapter Kit (3-2610.390)
The adapter kit allows a 9900 to be installed right on the 3-2610-41 sensor assembly to measure dissolved oxygen in a pressurized piping system. The kit includes a (¾" NPT closed nipple, 1¼" NPT closed nipple and DO threaded pipe adapter). The Signet 2610 Process Optical Dissolved Oxygen sensor is sold separately. Check the specification of the 2610 DO sensor for pressure limitations.

DO Sensor Air-Blast (3-2610-81950)
Attach an air blast adapter to the DO sensor and a 20 psi air source using a ¼" OD tube, this allows the sensor to be cleaned. A 60 second blast every four hours extends the length of time between overall maintenance and cleaning. Wetted material: Acetal, SS set screw

DO Anti Fouling Guard (3-2610-81300)
Reduces biological fouling while improving measurement accuracy and extends the length of time between cleaning of the sensor. Simply attach the copper guard onto the front of the sensor. It is recommended the guard be replaced every 6 months. Wetted material: Delrin, high purity copper

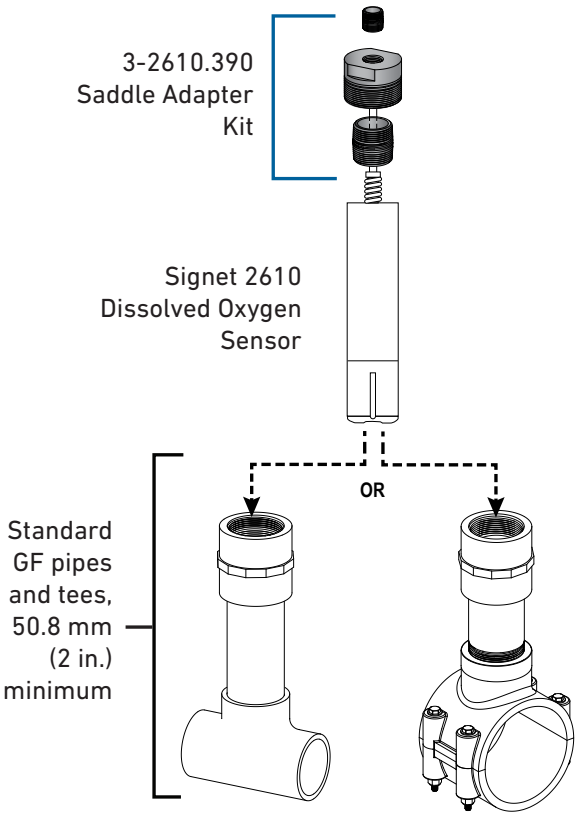

Adapters, Saddles and Tees

Adapters, Tees and Saddles
GF Signet has a line of tees and saddle assemblies in PVC and CPVC for pipes ranging 2 inch to 8 inches, to allow in-line measuring of dissolved oxygen.

Mfr. Part No.	Description
3-2610.100	2 inch Tee Assembly, PVC
3-2610.101-01	3 in. Saddle Assembly
3-2610.101-02	4 in. Saddle assembly
3-2610.101-03	6 in. Saddle Assembly
3-2610.101-04	8 in. Saddle Assembly

Shipping Weight	
	Contact the factory
Standards and Approvals	
	CE

Example Part Number
3-2610.390
DO sensor pipe adapter kit

Example Part Number
3-2610.81950
DO sensorAir-Blast

Example Part Number
3-2610.81300
DO sensor Anti Fouling Guard

Example Part Number
3-2610.101-01
3 in saddle assembly

Special only, not in the Signet Measurement and Control Product Catalog. Contact GF Signet for more information.

Special order products may not meet all of the specifications of the standard sensor assemblies.

Instruments and Misc. >>

Use the 3-2450-A PVC adapter to install a 3-2450-X ½ in. union pressure sensor into a ¾ inch NPT female pipe nipple.

Special only, not in the Signet Measurement and Control Product Catalog. Contact GF Signet for more information.

Example Part Number

3-2450-A

Adapter for the 2450 pressure sensor

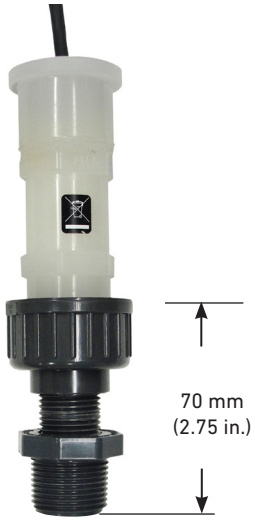

3-2450-A
½ in. union to ¾ in. NPT adapter - PVC material

Shipping Weight		
	0.46 kg	1.01 lb
Standards and Approvals		
	CE	

The 2450-GG Guage Guard has a PVDF body and ½ in. union adapter. This allows the 3-2450-X pressure sensor to be used in difficult applications that can attack the ceramic diaphragm or FPM O-ring. Must be used with the 3-2450-A, sold separately.

Fill the upper chamber with a compatible liquid of the same density. A PTFE membrane separates the pressure sensor from the chemical.

Special only, not in the Signet Measurement and Control Product Catalog. Contact GF Signet for more information.

Example Part Number

3-2450-GG

Gauge Guard

Shipping Weight		
	2.50 kg	5.51 lb
Standards and Approvals		
	CE	

Special order products may not meet all of the specifications of the standard sensor assemblies.

SAP Material Number 150 301 006

ASTM/Metric Pipe Saddles >>

Schedule 52 and Metric Ductile Iron K9 Type

A B -

The Signet IR5S and IR5MD Strap-on Iron Saddles are especially recommended where large taps are required.

The Signet Strap-on Iron Saddles have a ductile iron body per ASTM A536. The saddles have an outlet for the service connection that allows the NPT thread of the 2552 Magmeter or 3719 pH/ORP Wet-Tap assembly to be tapped into it. Sensors and Wet-Tap sold separately.

The gasket is made of Nitrile (Buna) and NSF 61 listed and has a temperature range of -29 °C to 82 °C (-20 °F to +180 °F).

IR5D-XXX-X

Ductile Iron Service Saddle for ductile iron pipes, with insert for flow sensor (USA)

Pipe Size - saddle and size/OD/Wall thickness	
035	3 ½ in. saddle, 3.74 to 4.13 in./ OD = 3.96 in./0.25 in.
040	4 in. saddle, 4.74 to 5.14 in./ OD = 4.80 in./0.29 in.
060	6 in. saddle, 6.84 to 7.6 in./ OD = 6.9 in./0.31 in.
080	8 in. saddle, 8.54 to 10.10 in./ OD = 9.05 in./0.33 in.
100	10 in. saddle, 10.64 to 12.12 in./ OD = 11.10 in./ 0.35 in.
120	12 in. saddle, 12.62 to 14.32 in./ OD = 13.20 in./0.37 in.
140	14 in. saddle, 14.73 to 15.65 in./ OD = 15.30 in./0.39 in.
160	16 in. saddle, 17.25 to 17.80 in./ OD = 17.40 in./0.40 in.
180	18 in. saddle, 19.38 to 19.68 in./ OD = 19.50 in./0.41 in.
200	20 in. saddle, 21.55 to 21.65 in./ OD = 21.60 in./0.42 in.
240	24 in. saddle, 25.75 to 25.85 in./ OD = 25.80 in./0.44 in.
300	30 in. saddle, 31.75 to 32.50 in./ OD = 32.00 in./0.47 in.

–	Service port access
-	with insert for flow sensor
A	1¼ in. NPT - use with 3-2552-2X or 3519
B	1½ in. NPT - use with 3-2552-3X or 3519

IR5MD-XXX-X

Iron Service Saddle (K9 type) for ductile iron pipes with insert for flow sensor (EU)

Pipe Size - saddle and size/ OD/ Wall thickness	
040	K-9 saddle, DN 40/ OD = 56 mm (2.205 in.)/ 6 mm (0.236 in.)
050	K-9 saddle, DN 50/ OD = 66 mm (2.598 in.)/ 6 mm (0.236 in.)
060	K-9 saddle, DN 60/ OD = 77 mm (3.03 in.)/ 6 mm (0.236 in.)
065	K-9 saddle, DN 65/ OD = 82 mm (3.23 in.)/ 6 mm (0.236 in.)
080	K-9 saddle, DN 80/ OD = 98 mm (3.86 in.)/ 6 mm (0.236 in.)
100	K-9 saddle, DN 100/ OD = 118 mm (4.65 in.)/ 6 mm (0.236 in.)
125	K-9 saddle, DN 125/ OD = 144 mm (5.67 in.)/ 6 mm (0.236 in.)
150	K-9 saddle, DN 150/ OD = 170 mm (6.69 in.)/ 6 mm (0.236 in.)
200	K-9 saddle, DN 200/ OD = 222 mm (8.74 in.)/ 6.3 mm (0.248 in.)
250	K-9 saddle, DN 250/ OD = 274 mm (10.8 in.)/ 6.8 mm (0.268 in.)
300	K-9 saddle, DN 300/ OD = 326 mm (12.84 in.)/ 7.2 mm (0.283 in.)
350	K-9 saddle, DN 350/ OD = 378 mm (14.88 in.)/ 7.7 mm (0.303 in.)
400	K-9 saddle, DN 400/ OD = 429 mm (16.89 in.)/ 8.1 mm (0.319 in.)

–	Service port access
-	with insert for flow sensor
A	1¼ in. NPT - use with 3-2552-2X or 3519
B	1½ in. NPT - use with 3-2552-3X or 3519

Example Part Number

IR5MD-060-C

Ductile Iron Strap-on saddle, metric K-9 saddle, for DN 60 pipe, with insert for flow sensor

Special order products may not meet all of the specifications of the standard sensor assemblies.

SAP Material Number 150 301 006

ASTM/Metric Pipe Saddles >>

Schedule 40 and 80

The Signet IR4S and IR8S Strap-on Iron Saddles are especially recommended where large taps are required.

The Signet Strap-on Iron Saddles have a ductile iron body per ASTM A536. The saddles have an outlet for the service connection that allows the NPT thread of the 2552 Magmeter or 3719 pH/ORP Wet-Tap assembly to be tapped into it.

The gasket is made of Nitrile (Buna) and NSF 61 listed and has a temperature range of -29 °C to 82 °C (-20 °F to 180 °F).

IRXXXXXX

Iron Service Saddle					
Pipe Schedule - Iron Service Saddle					
4S	Schedule 40 pipe				
8S	Schedule 80				
	Pipe Size - OD/Wall thickness				
	140	14 in. Pipe (OD = 12.62 in. to 14.32 in./320 to 363 mm)			
	160	16 in. Pipe (OD = 15.95 in. to 17.25 in./405 to 438 mm)			
	180	18 in. Pipe (OD = 17.40 in. to 18.00 in./442 to 478.5 mm)			
	200	20 in. Pipe (OD = 19.25 in. to 20.00 in./489 to 508 mm)			
	240	24 in. Pipe (OD = 23.75 in. to 24.50 in./603 to 622 mm)			
		Inlet Size			
		-	with insert for flow sensor		
		A	1¼ in. NPT - use with 3-2552-2X or 3519		
		B	1½ in. NPT - use with 3-2552-3X or 3519		

Example Part Number

IR4S180A

Iron Strap-on saddle, schedule 40 pipe, for 18 inch pipe
1¼ inch NPT inlet.

Added customer value:
GF Signet will preassemble your SS or Brass ball valve to the saddle of your choice. Prior to shipping, GF Signet will apply PTFE sealant tap to the nipple and ball valve and also the 2552 of your choice.

The customer will only have to install the saddle assembly onto the pipe and thread in the Magmeter. Cost of this service would be the standard list price of the Magmeter, saddle and ball valve assembly less your standard discount and a NET I-Lab charge to do the assembly work.

Refer to the Signet Measurement and Control Product Catalog for additional 2552 information.

3-2552-X1-X-XXX(X)-BV-X-IRX

Magmeter Process Connection							
2	Magmeter - 1¼ in. NPT process connector						
3	Magmeter - 1½ in. NPT process connector						
	–	**Cable type**					
		A	Fixed cable				
		B	Water tight sensor connector				
		–	**Cable length**				
			025	25 ft standard length for "A" version			
			050	50 ft			
			075	75 ft			
			100	100 ft			
			CUST	Defined by customer			
			–	**Ball valve material**			
				BV-S	Ball Valve Stainless Steel		
				BV-B	Ball Valve Brass		
				–	**Saddle**		
					IRX	Choose any A or B type saddle	

Example Part Number

3-2552-21-A-050-BV-S-IRX

Magmeter, 1 ¼ in. NPT process connection, with digital (S^3L) output, 50 feet of cable, a Stainless Steel ball valve and saddle.

Special order products may not meet all of the specifications of the standard sensor assemblies.

SAP Material Number 150 301 006

ASTM/Metric Pipe Saddles >>

Schedule 40 and 80

The Signet IR4S and IR8S Strap-on Iron Saddles are especially recommended where large taps are required.

The Signet Strap-on Iron Saddles have a ductile iron body per ASTM A536. The saddles have an outlet for the service connection that allows the NPT thread of the 2552 Magmeter or 3719 pH/ORP Wet-Tap assembly to be tapped into it.

The gasket is made of Nitrile (Buna) and NSF 61 listed and has a temperature range of -29 °C to 82 °C (-20 °F to 180 °F).

IRXXXXXX

Iron Service Saddle		
Pipe Schedule - Iron Service Saddle		
4S	Schedule 40 pipe	
8S	Schedule 80	
	Pipe Size - OD/Wall thickness	
	020	12 in. Pipe (OD = 2.35 in. to 2.56 in./59.69 to 65.0 mm)
	025	2.5 in. Pipe (OD = 2.44 in. to 2.91 in./62 to 74 mm)
	030	3 in. Pipe (OD = 2.97 in. to 3.54 in./75.4 to 90.0 mm)
	040	4 in. Pipe (OD = 4.40 in. to 4.80 in./111.76 to 121.9 mm)
	050	5 in. Pipe (OD = 5.00 in. to 5.63 in./127 to 143 mm)
	060	6 in. Pipe (OD = 5.94 in. to 6.70 in./151 to 170 mm)
	080	8 in. Pipe (OD = 7.96 in. to 8.72 in./202.2 to 221 mm)
	100	10 in. Pipe (OD = 10.64 in. to 12.12 in./270.2 to 308 mm)
	120	12 in. Pipe (OD = 12.62 in. to 14.32 in./320.5 to 363.7 mm)
		Inlet Size
		A 1¼ in. NPT - use with 3-2552-2X or 3519
		B 1½ in. NPT - use with 3-2552-3X or 3519

Example Part Number

IR8S080A

Iron Strap-on saddle, schedule 80 pipe, for 8 inch/202mm pipe 1¼ inch NPT inlet.

Special order products may not meet all of the specifications of the standard sensor assemblies.

SAP Material Number 150 301 006

ASTM/Metric Pipe Saddles >>

Schedule 40

A and B

The A and B versions of the Weld-on Weldolet allow easy installation of the 3-2552 and 3-3719 pH/ORP Wet-Tap assembly into metal piping systems. The C version allows standard insertion sensors to be used. These products are available in Brass, Stainless Steel and Carbon Steel.

Smaller Weld-on Weldolet sizes are available.

WARNING:
Verify the pipe ID, OD, wall thickness and the sensor to be used in the application. Contact GF Special products for assistance in verifying proper system selection.

Weld-on Weldolet

Threadolet Material	
CS4	Carbon Steel, Schedule 40
BR4	Brass, Schedule 40
CR4	Stainless Steel, Schedule 40

Special Feature	
140	14 in. Pipe - Call for metric size pipes
160	16 in. Pipe - Call for metric size pipes
180	18 in. Pipe - Call for metric size pipes
200	20 in. Pipe - Call for metric size pipes
240	24 in. Pipe - Call for metric size pipes

Inlet Size	
-	Insert for flow sensor
A	1¼ in. NPT (2552-2 or 3519)
B	1½ in. NPT (2552-3 or 3519)

Example Part Number

CS4140A

Threaded weldolet, carbon steel, schedule 40, 14 in. pipe, 1¼ in. NPT inlet.

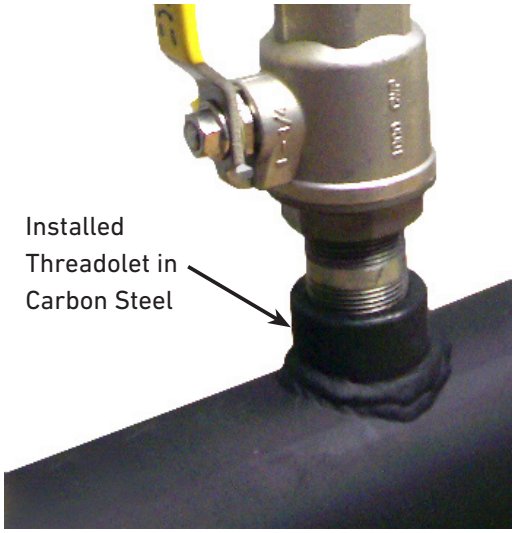

Shipping Weight	
0.50 kg (approx.)	1.10 lb (approx.)

Special order products may not meet all of the specifications of the standard sensor assemblies.

SAP Material Number 150 301 006

ASTM/Metric Pipe Saddles >>

The Weld-on Weldolet allow easyinstallation of the 3-2552 and 3-3719-11 pH/ORP Wet-Tap assembly into metal piping systems. These products are available in Stainless Steel, Carbon Steel and Brass.

Smaller Weld-on Weldolet sizes are available.

WARNING:
Verify the pipe ID, OD, wall thickness and the sensor to be used in the application. Contact GF Special products for assistance in verifying proper system selection.

Choose: 2129-9XXX (Carbon Steel), 2149-9XXX (Stainless Steel) or 2189-9XXX (Brass)

Stainless Steel	
Use with 2552-21	
202	2 in. Threadolet, 1 ¼ in. NPT connection
204	4 to 5 in. Threadolet, 1 ¼ in. NPT connection
291	6 in. (153 mm) weldolet, 1 ¼ in. NPT connection
292	8 to 10 in. (203 to 254 mm) weldolet, 1 ¼ in. NPT connection
294	12 to 18 in. (305 to 457 mm) weldolet, 1 ¼ in. NPT connection
295	20 to 36 in. (508 to 915 mm) weldolet, 1 ¼ in. NPT connection
296	38 in. (965 mm) weldolet, 1 ¼ in. NPT connection
Use with 2552-33 or 3-3719-11	
091	6 in. (153 mm) weldolet, 1 ½ in. NPT connection
092	8 to 10 in. (203 to 254 mm) weldolet, 1 ½ in. NPT connection
094	12 to 18 in. (305 to 457 mm) weldolet, 1 ½ in. NPT connection
095	20 to 36 in. (508 to 915 mm) weldolet, 1 ½ in. NPT connection
096	38 in. (965 mm) weldolet, 1 ½ in. NPT connection

Example Part Number

2189-9091 Brass

Threaded weldolet, brass, for a 6 in. pipe, 1½ in. NPT connection.

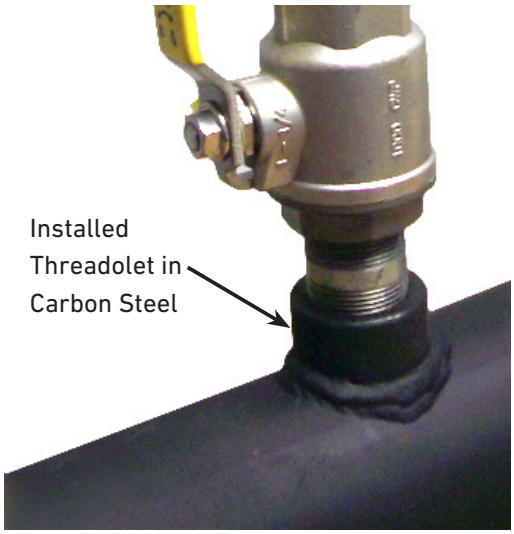

Shipping Weight	
0.50 kg (approx.)	1.10 lb (approx.)

Special order products may not meet all of the specifications of the standard sensor assemblies.

SAP Material Number 150 301 006

ASTM/Metric Pipe Saddles >>

PVC Saddle, ASTM/Metric pipe sizes, glue-on, PSI rated 5.5 bar (80 PSI)

Shown with insert

A full line of PVC glue on saddle for large pipes. Proper installation requires the customer to provide and install straps after gluing to meet the 80 psi pressure rating.

Saddles are available to allow all GF Signet flow sensors or 3719 pH Wet-Tap assembly to be installed into PVC piping systems.

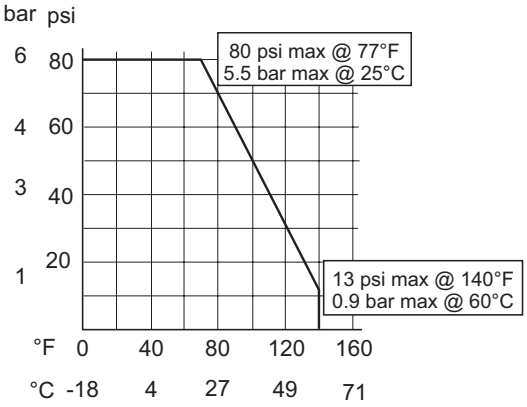

PV8SXX-X

	Pipe Size - ASTM PVC Saddles
10	Schedule 80, 10 in. (OD = 10.75 in. X 0.596 in. wall)
12	Schedule 80, 12 in (OD = 12.75 in. x 0.687 in. wall)
14	Schedule 80, 14 in. (OD = 14.00 in. x 0.750 in. wall)
16	Schedule 80, 16 in. (OD = 16.00 in. x 0.843 in. wall)
18	Schedule 80, 18 in. (OD = 18.00 in. x 0.938 in. wall)
20	Schedule 80, 20 in. (OD = 20.00 in. x 1.031 in. wall)
24	Schedule 80, 24 in. (OD = 24.00 in. x 1.219 in. wall)

	Service port size
-	with insert for flow sensor
A	1¼ in. NPT for 2552-2 X
B	1½ in. NPT for 2552-2X or 3519
C	2.0 in NPT for 3519

IPSXXX-X

	Pipe Size Metric PVC Saddles
110	PVC IPS 110 mm pipe
350	PVC IPS 350 mm pipe
400	PVC IPS 400 mm pipe
450	PVC IPS 450 mm pipe
500	PVC IPS 500 mm pipe
550	PVC IPS 550 mm pipe
600	PVC IPS 600 mm pipe

	Service port size
-	with insert for flow sensor
A	1¼ in. NPT for 2552-2 X
B	1½ in. NPT for 2552-2X or 3519
C	2.0 in NPT for 3519

Example Part Number

IPS450-C

PVC glue-on saddle, IPS 450 mm pipe, with insert for flow sensor.

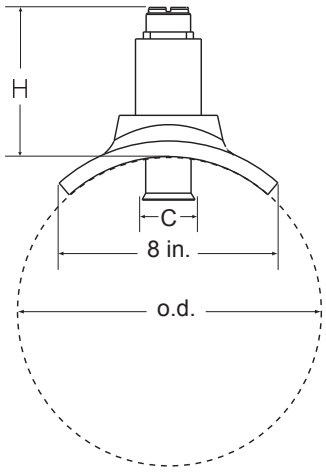

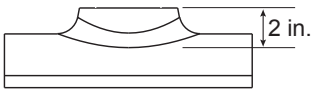

Straps used during installation

Special order products may not meet all of the specifications of the standard sensor assemblies.

SAP Material Number 150 301 006

ASTM/Metric Pipe Saddles >>

Vinyl ester resin fiberglass saddles

Shown with insert

Metric fiberglass saddles are manufactured from corrosion resistant epoxy vinyl ester, polyester, isophthalic, epoxy and furan resins. ASTM E-84 Class 1 flame spread and low smoke resins are also available where applications require their use.

Our standard resin systems allow operating temperatures to 200 °F, with higher temperatures of 250 °F and 300 °F available.

Ultraviolet inhibitor and waxcoat in the external layers are standard on all fiberglass saddles.

FPSXX(X)-X

	Pipe Size - MUST supply OD, ID and Wall Thickness when ordering
20	2 in. Fiberglass Pipe
30	3 in. Fiberglass Pipe
40	4 in. Fiberglass Pipe
60	6 in. Fiberglass Pipe
80	8 in. Fiberglass Pipe
100	10 in. Fiberglass Pipe
120	12 in. Fiberglass Pipe
140	14 in. Fiberglass Pipe

	Service port access
-	with insert for flow sensor
A	1¼ in. SS NPT insert for 2552-2 X (NOT available for 14 in. pipe)
B	1½ in. SS NPT insert for 2552-3X or 3519 (NOT available for 14 in. pipe)

Example Part Number

FPS100-A

Vina\yl ester resin fiberglass saddle, for a 10 in. fiberglass pipe, 1¼ in. NPT insert for 2552-2X.

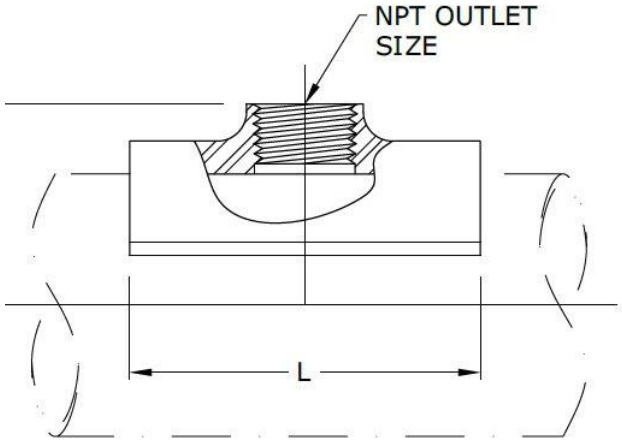

Straps used during installation

Special order products may not meet all of the specifications of the standard sensor assemblies.

SAP Material Number 150 301 006

Instruments and Misc. >>

OEM Version, Chlorine and Chlorine Dioxide Systems

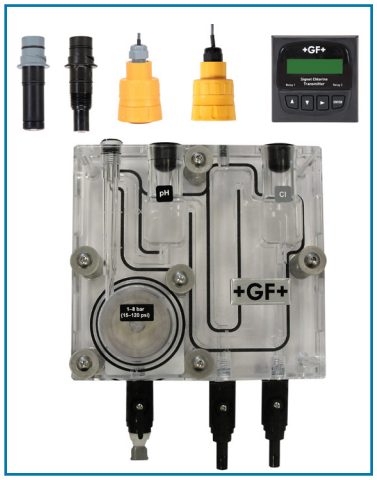

The OEM version of the 4630 chlorine panel family is to incorporate the GF Signet Chlorine panel design into your own control panel or skid. Complete with the standard flow cell rated up to 120 psi (8 bar), with intergrated pressure regulator, VAFM and isolation valves, inlet, effluent and sample port.

Free chlorine or Chlorine dioxide electronics (2650-7) and optional pH electronics (2750-7) are supplied with 15 ft. (4.6 m) cable to allow flexible design and separation between the 8630 transmitter and flow cell. 8630 transmitter can be powered directly with 12 to 24 volts DC or use a 7300 series power supply for AC powered applications. Comes with a Chlorine Sensor and optional pH electrode.

3-463X-X-X

Chlorine/Chlorine Dioxide Systems - OEM			
0	Free Chlorine		
2	Chlorine Dioxide		
	-	**Range**	
		1	0.02 to 2 PPM
		2	0.05 to 5 PPM
		3	0.1 to 20 PPM
		-	**Options**
			0 No pH electrode
			1 With pH electrode

Example Part Number

3-4632-2-1

OEM Chlorine Dioxide system, 0.05 to 5 PPM, with pH electrode.

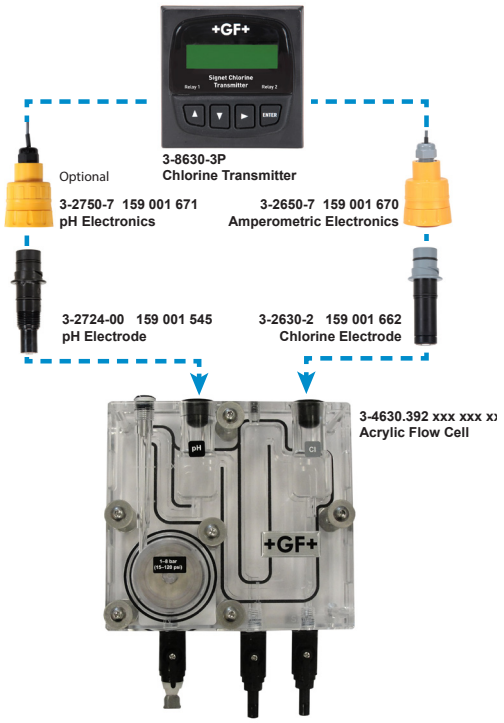

General		
Materials		
Flow Cell	Acrylic	
Wiring Enclosure	Polycarbonate	
Max. Temperature/Pressure Rating		
System Inlet Pressure Rating	1 to 8 bar	15 to 120 psi
Pressure Regulator	< 0.69 bar (10 psi) variation over all ranges of flow and pressure	
Flow Tolerance	± 15% or rated specification above	
Flow Rate Limits	30.24 to 45.36 LPH	8 to 12 US gal/h
Storage Temperature	0 °C to 65 °C	32 °F to 149 °F

Operating Temperature	0 °C to 45 °C	32 °F to 113 °F
Electrical		
DC Input - Standard Configuration	12 to 24 VDC ±10% regulated, 250 mA max.	
AC Input - Optional Configuration	100 to 240 VAC nominal 50 to 60 Hz, 0.17A at 100 VAC	
Shipping Weight		
	10 kg	22 lb
Standards and Approvals		
	CE, UL, CUL	
	China RoHS	
	Manufactured under ISO 9001 for Quality and ISO 14001 for Environmental Management	

Special order products may not meet all of the specifications of the standard sensor assemblies.

SAP Material Number 150 301 006

Instruments and Misc. >>

The 4150-DL is a simple to use data logger that can be easily installed onto the back of the 4150 power supply. The data logger is mounted in a splashproof enclosure which comes complete with software that allows the capability to download data to any laptop in a comma separated value (CSV) format.

Special only, not in the Signet Measurement and Control Product Catalog. Contact GF Signet for more information.

Example Part Number

3-4150-DL

Data Logger for the 4150 Turbidimeter

Datalogger for the 4150 Turbidimeter

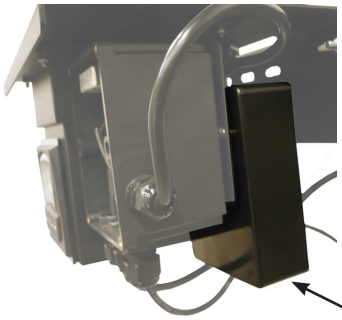

Data logger Enclosure

3-4150.24017S Power Supply

3-4150-20111 Power Supply Kit

Other Turbidity Special Order Products

Mfr. Part No.	Code	Description
3-4150-24017S	-	Power Supply 120/220 VAC
3-4150-20111	-	Power Supply kit - installed by customer
3-4150.381	**159 001 613**	Replacement desiccant cap with gasket
3-4150-TU0805B20	**159 301 006**	Tubing 8mm X 5 mm (5/16 X 3/16) water supply and drain, 10m (32ft), influent/effluent 10 m (32 ft)

Shipping Weight		
	0.68 kg	1.50 lb
Standards and Approvals		
	CE	

Special order products may not meet all of the specifications of the standard sensor assemblies.

SAP Material Number 150 301 006

Instruments and Misc. >>

3-4150.53XXX NTU Standard

3-4150.2833X Solid Validation Standard (low or mid NTU available)

3-4150.FlCell Flow Cell

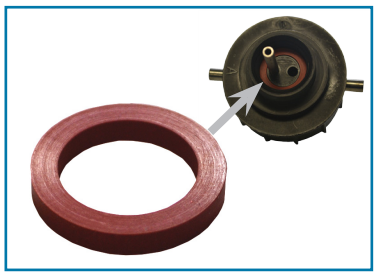

3-4150.21228 Red O-ring for flow cell

3-4150.XXXXX

53090	0.02 NTU Standard, 125 ml
53240	0.02 NTU Standard, 500 ml
53030	0.02 NTU Standard, 1 liter
39825	10.0 NTU Standard, 125 ml
53260	10.0 NTU Standard, 500 ml
53000	10.0 NTU Standard, 1 liter
28335	ProCheck-S Solid Validation Standard, low NTU value
28336	ProCheck-S Solid Validation Standard, mid NTU value
21228	Red O-ring, Cuvette to flow cell (5 total)
-FlCell	Flow Cell only. No Cuvette or Tubing kit

Example Part Number

3-4150.21228

Red O-rings, Cuvette to flow cell, 5 total.

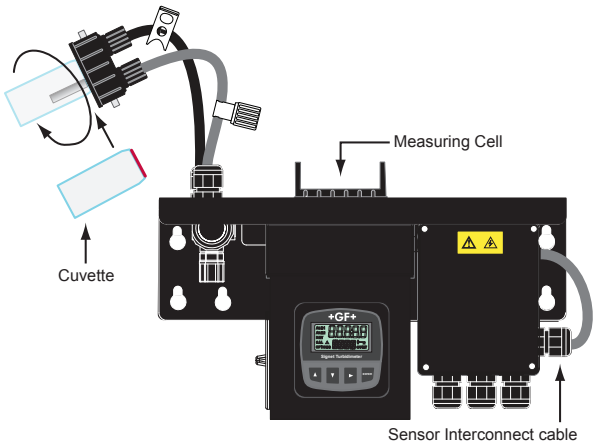

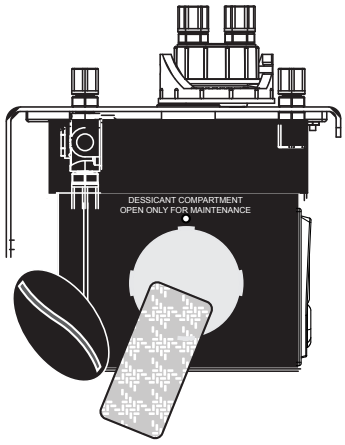

Desiccant Pouch
3-4150.380

Shipping Weight	
	Contact factory
Standards and Approvals	
	See Signet Measurement and Control Product Catalog

SAP Material Number 150 301 006

Instruments and Misc. >>

3-263X.XXX

0.683	Free Chlorine photometer 0 -10 ppm
0.684	FCL Reagent Dispenser - 100 test
0.385	Thermometer
2.686	Chlorine Dioxide Photometer 0 -10 ppm

Example Part Number

3-2632.686

Calibration Kit with Chlorine Dioxide Photometer 0 -10 ppm

Free Chlorine or Chlorine dioxide calibration kits

DPD kit:
Required to properly support the Signet Free Chlorine and Chlorine Dioxide Amperometric Sensor panel assemblies

- EPA approved method to test Free Chlorine.
- Used for initial startup and calibration of the 3-463X chlorine panels
- Use after maintenance/service of the 3-263X series Free Chlorine sensors
- Assist in system troubleshooting
- 100 reagent test dispenser and thermometer sold separately

Special only, not in the Signet Measurement and Control Product Catalog. Contact GF Signet for more information.

FCL Reagent Dispenser

Thermometer

Thermometer can be used to calibrate pH and conductivity sensors

General		
Range	0 - 10 mg/l	
Method	EPA Approved - DPD	
Resolution		
	0.01 ppm for 0 - 6 ppm	
	0.1 ppm for 6 - 10 ppm	
Measurement	1 cm path length	
Accuracy		
	2% 0 -6 ppm	
	10% 6 -10 ppm	
Response Time	3 seconds	
Power Supply	4 - AAA alkaline batteries (up to 1000 tests)	
Display	7 segment bright vision LCD	

Certification	CE	
Light Source	Longlife LED - 515 mm	
Sample Size	3 ml	
Enclosure	IP67, waterproof at 1 m for 30 minutes	
Shipping Weight		
Photometer	1.00 kg	2.2 lb
Reagent Dispenser	0.23 kg	0.50 lb
Thermometer	0.12 kg	0.26 lb
Standards and Approvals		
	CE	

Special order products may not meet all of the specifications of the standard sensor assemblies.

Instruments /Misc. >>

5541-418-XX

Cable Length	
7	7 m (23 ft)
8	8 m (26.25 ft)
9	9 m (29.5 ft)
10	10 m (32.8 ft)
15	15 m (49.25 ft)
16	16 m (52.5 ft)
25	25 m (82 ft)
30	30 m (98.5 ft)
31	31 m (101 ft)
33	33 m (108.25 ft)

Extended length cable for the 2552-"B"series Magmeter.
These molded waterproof cable assemblies can be ordered in different lengths to support long distance connections to the transmitter or data logging device. The removable connector allows the Magmeters to be easily removed from its location for servicing without having to remove the total length of cable from a conduit.

Special only, not in the Signet Measurement and Control Product Catalog. Contact GF Signet for more information.

Example Part Number
5541-418-7

2552-"B" Magmeter 4 pin Cable Assembly, 7 m (23 ft).

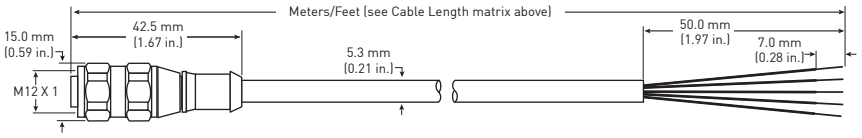

Shipping Weight	
	Contact factory

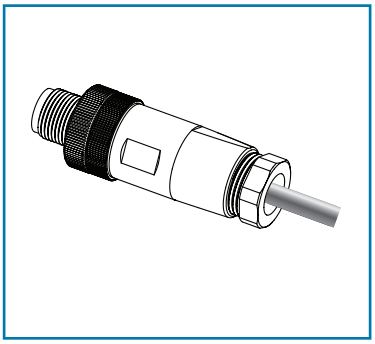

3-2552.XXX

Connector	
397	Male Connector
398	Female Connector, 4 pin

Example Part Number
3-2552.398

Water tight cable connector, for the 3-2552 "B" version Magmeter, 4 pin Cable Assembly, female connector

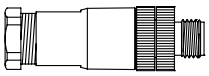

3-2552.398
Male connector

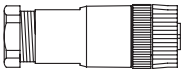

3-2552.397
Female connector

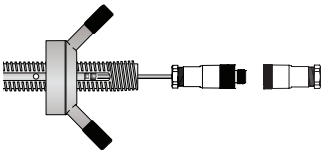

3-2552-XX-A-XX
Requires 1 male + 1 female plug
to extend the cable of the "A" version

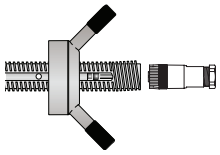

3-2552-XX-B-XX
Requires 1 female plug

2552 water tight cable connectors allow the customer to make their own custom length cable assemblies.

These connectors can also be used to extend the length of the "A" type 2552 Magmeters by installing a female connector onto the standard cable assembly of the 2552-"A" Magmeter and produce an extended cable assembly with the male version of the connector.

5522-0422 Cable, #22 4 Cond 7/30 PVC JKT 25 feet.

Special only, not in the Signet Measurement and Control Product Catalog. Contact GF Signet for more information.

Shipping Weight		
Cables	0.45 kg (approx.)	1.00 lb (approx.)
Connectors	0.11 kg	0.24 lb
Standards and Approvals		
	CE	

Special order products may not meet all of the specifications of the standard sensor assemblies.

Application Assistance Form

Please provide as much detail as possible for prompt assistance.

Date:

Company:

Contact:

Address:

City: State/Country: Zip/Postal Code:

Country:

Phone: Ext: Fax: Email:

Name of project:

GF Distributor: Contact: Tel:

Description of application (use separate sheet if necessary):

Piping system: (if flow sensor, on separate sheet sketch piping system - see Installation section for upstream and downstream requirements)

Piping material: Size: Schedule: Angle: Vertical ☐ or Horizontal ☐

Fluid temp. range, min: max: nominal: Control range:

Line press. range, min: max: nominal: Control range:

Process pH range, min: max: nominal: Control range:

Cond/Resist range, min: max: nominal: Control range:

Turbidity range, min: max: nominal: Control range:

Chlorine range, min: max:

pH min: max:

Temperature min: max:

Pressure min: max:

Sensor mounted: Indoor ☐ or Outdoor ☐ Indicator mounted: Indoor ☐ or Outdoor ☐

Sensor mounted: In-line ☐ or Submersible ☐

If submersible, tank size and shape:

Fluid to be measured: Chemistry:

Fluid viscosity: Specific gravity:

Percent solids: Description: Size of solids:

Flow rate, min: max: nominal:

Back pressure after sensor: psig/bar

Required accuracy: Unit of measurement:

Cable run from sensor to indicator: ft/m

Available power: Amperage:

Required outputs & Qty:

GF Piping Systems

Worldwide at home

Our sales companies and representatives
ensure local customer support in over 100 countries.

www.gfsignet.com

Argentina / Southern South America
Georg Fischer Central Plastics
Sudamérica S.R.L.
Buenos Aires, Argentina
Phone +54 11 4512 02 90
gfcentral.ps.ar@georgfischer.com
www.gfps.com/ar

Australia
George Fischer Pty Ltd
Riverwood NSW 2210 Australia
Phone +61 (0) 2 9502 8000
australia.ps@georgfischer.com
www.gfps.com/au

Austria
Georg Fischer
Rohrleitungssysteme GmbH
3130 Herzogenburg
Phone +43 (0) 2782 856 43-0
austria.ps@georgfischer.com
www.gfps.com/at

Belgium / Luxembourg
Georg Fischer NV/SA
1070 Bruxelles/Brüssel
Phone +32 (0) 2 556 40 20
be.ps@georgfischer.com
www.gfps.com/be

Brazil
Georg Fischer Sist. de Tub. Ltda.
04795-100 São Paulo
Phone +55 (0) 11 5525 1311
br.ps@georgfischer.com
www.gfps.com/br

Canada
Georg Fischer Piping Systems Ltd
Mississauga, ON L5T 2B2
Phone +1 (905) 670 8005
Fax +1 (905) 670 8513
ca.ps@georgfischer.com
www.gfps.com/ca

China
Georg Fischer Piping Systems Ltd
Shanghai 201319
Phone +86 21 3899 3899
china.ps@georgfischer.com
www.gfps.com/cn

Denmark / Iceland
Georg Fischer A/S
2630 Taastrup
Phone +45 (0) 70 22 19 75
info.dk.ps@georgfischer.com
www.gfps.com/dk

Finland
Georg Fischer AB
01510 VANTAA
Phone +358 (0) 9 586 58 25
Fax +358 (0) 9 586 58 29
info.fi.ps@georgfischer.com
www.gfps.com/fi

France
Georg Fischer SAS
95932 Roissy Charles de Gaulle Cedex
Phone +33 (0) 1 41 84 68 84
fr.ps@georgfischer.com
www.gfps.com/fr

Germany
Georg Fischer GmbH
73095 Albershausen
Phone +49 (0) 7161 302-0
info.de.ps@georgfischer.com
www.gfps.com/de

India
Georg Fischer Piping Systems Ltd
400 076 Mumbai
Phone +91 224007 2001
branchoffice@georgfischer.com
www.gfps.com/in

Indonesia
George Fischer Pte Ltd –
Representative Office
Phone +62 21 2900 8564
Fax +62 21 2900 8566
sgp.ps@georgfischer.com
www.gfps.com/sg

Italy
Georg Fischer S.p.A.
20063 Cernusco S/N (MI)
Phone +39 02 921 861
it.ps@georgfischer.com
www.gfps.com/it

Japan
Georg Fischer Ltd
556-0011 Osaka,
Phone +81 (0) 6 6635 2691
jp.ps@georgfischer.com
www.gfps.com/jp

Korea
Georg Fischer Piping Systems
271-3 Seohyeon-dong Bundang-gu
Seongnam-si, Gyeonggi-do
Seoul 463-824
Phone +82 31 8017 1450
Fax +82 31 8017 1454
kor.ps@georgfischer.com
www.gfps.com/kr

Malaysia
George Fischer (M) Sdn. Bhd.
40460 Shah Alam, Selangor Darul Ehsan
Phone +60 (0) 3 5122 5585
Fax +603 5122 5575
my.ps@georgfischer.com
www.gfps.com/my

Mexico / Northern Latin America
Georg Fischer S.A. de C.V.
Apodaca, Nuevo Leon
CP66636 Mexico
Phone +52 (81) 1340 8586
Fax +52 (81) 1522 8906
mx.ps@georgfischer.com
www.gfps.com/mx

Middle East
Georg Fischer
Piping Systems (Switzerland) Ltd
Dubai, United Arab Emirates
Phone +971 4 289 49 60
gcc.ps@georgfischer.com
www.gfps.com/int

Netherlands
Georg Fischer N.V.
8161 PA Epe
Phone +31 (0) 578 678 222
nl.ps@georgfischer.com
www.gfps.com/nl

New Zealand
Georg Fischer Ltd
13 Jupiter Grove, Upper Hutt 5018
PO Box 40399, Upper Hutt 5140
Phone +64 (0) 4 527 9813
nz.ps@georgfischer.com
www.gfps.com/nz

Norway
Georg Fischer AS
1351 Rud
Phone +47 67 18 29 00
no.ps@georgfischer.com
www.gfps.com/no

Philippines
George Fischer Pte Ltd
Representative Office
Phone +632 571 2365
Fax +632 571 2368
sgp.ps@georgfischer.com
www.gfps.com/sg

Poland
Georg Fischer Sp. z o.o.
05-090 Sekocin Nowy
Phone +48 (0) 22 31 31 0 50
poland.ps@georgfischer.com
www.gfps.com/pl

Romania
Georg Fischer
Piping Systems (Switzerland) Ltd
020257 Bucharest - Sector 2
Phone +40 (0) 21 230 53 80
ro.ps@georgfischer.com
www.gfps.com/int

Russia
Georg Fischer
Piping Systems (Switzerland) Ltd
Moscow 125047
Phone +7 495 258 60 80
ru.ps@georgfischer.com
www.gfps.com/ru

Singapore
George Fischer Pte Ltd
11 Tampines Street 92, #04-01/07
528 872 Singapore
Phone +65 6747 0611
Fax +65 6747 0577
sgp.ps@georgfischer.com
www.gfps.com/sg

Spain / Portugal
Georg Fischer S.A.
28046 Madrid
Phone +34 (0) 91 781 98 90
es.ps@georgfischer.com
www.gfps.com/es

Sweden
Georg Fischer AB
117 43 Stockholm
Phone +46 (0) 8 506 775 00
info.se.ps@georgfischer.com
www.gfps.com/se

Switzerland
Georg Fischer
Rohrleitungssysteme (Schweiz) AG
8201 Schaffhausen
Phone +41 (0) 52 631 30 26
ch.ps@georgfischer.com
www.gfps.com/ch

Taiwan
Georg Fischer Co., Ltd
San Chung Dist., New Taipei City
Phone +886 2 8512 2822
Fax +886 2 8512 2823
www.gfps.com/tw

United Kingdom / Ireland
George Fischer Sales Limited
Coventry, CV2 2ST
Phone +44 (0) 2476 535 535
uk.ps@georgfischer.com
www.gfps.com/uk

USA / Caribbean
Georg Fischer LLC
Irvine, CA 92618-1904
Phone +1 (714) 731 8800
Toll Free 800 854 4090
us.ps@georgfischer.com
www.gfpiping.com

International
Georg Fischer
Piping Systems (Switzerland) Ltd
8201 Schaffhausen/Switzerland
Phone +41 (0) 52 631 30 03
Fax +41 (0) 52 631 28 93
info.export@georgfischer.com
www.gfps.com/int

The technical data is not binding. They neither constitute expressly warranted characteristics nor guaranteed properties nor a guaranteed durability. They are subject to modification. Our General Terms of Sale apply.

3-0000.720 (Rev E 12/16)
©2016 Georg Fischer Signet LLC
3401 Aero Jet Avenue, El Monte CA 91731-2882
Tel (626) 571-2770, Fax (626) 573-2057